"THE MATERIAL HEREIN IS FOR INFORMATION PURPOSES ONLY AND IS SUBJECT TO CHANGE WITHOUT NOTICE. DIGITAL EQUIPMENT CORPORATION ASSUMES NO RESPONSIBILITY FOR ANY ERRORS WHICH MAY APPEAR HEREIN."

# FIELD MAINTENANCE PRINT SET

"THIS DRAWING AND SPECIFICATIONS, HEREIN, ARE THE PROPERTY OF DIGITAL EQUIPMENT CORPORATION AND SHALL NOT BE REPRODUCED OR COPIED OR USED IN WHOLE OR IN PART AS THE BASIS FOR THE MANUFACTURE OR SALE OF ITEMS WITHOUT WRITTEN PERMISSION. COPYRIGHT © 1976 , DIGITAL EQUIPMENT CORPORATION."

## TABLE OF CONTENTS


| | |
|---|---|
| FIELD MAINTENANCE PRINT SET | B-TC-DRV11-Ø-3 |
| 16 BIT PARALLEL LINE UNIT | A-PL-DRV11-Ø-Ø |
| 16 BIT PARALLEL LINE UNIT | D-CS-M7941-Ø-1 |
| SHIPPING LIST DRV11 | A-PL-DRV11-Ø-2 |
| K-PL-BCO6K-O-O | MIRROR IMAGE CABLE |


| UNIT VARIATIONS COVERED BY THIS PRINT SET |
|---|
| DRV11-Ø |
| DRV11-D |

DRV11

**Field Maintenance Print Set**

**Digital Equipment Corporation**

PRINT SET ORDER NO.
MPØØØ54

| REVISIONS | | |
|---|---|---|
| REV. | CHG. NO. | DATE |
| A | ABØØ3 | 2-82 |

| USED ON OPTION/MODEL | |
|---|---|
| 11/Ø3 | |

SHEET I OF 1

| | | | |
|---|---|---|---|
| DRN. D. HEALY | DATE 1/30/76 | digital | |
| CHK'D D. HEALY | DATE 1/30/76 | TITLE: FIELD MAINTENANCE PRINT SET DRV11 | |
| PROJ. ENG. Elizabeth Kenney | DATE 2/23/76 | SIZE B | CODE TC | NUMBER DRV11-Ø-3 | REV. A |
| FIELD SERV. | DATE 2/24/76 | DIST. | | | |

DRB 124

PN

AUTOMATED BY PRTLST.3P(44)

# P A R T S  L I S T



| LINE | ITEM | DOCUMENT NUMBER | PART NUMBER | DESCRIPTION | QUANTITY PER VARIATION 00 | D |
|---|---|---|---|---|---|---|
| 1 | 1 | D-CS-M7941-0-1 | M7941-00 | 16 BIT PARALLEL LINE UNIT 11V03 | 1 | 1 |
| 2 | 2 | A-PS-9905622-0-0 | 9905622-00 | BOX,FOLDING | 1 | - |
| 3 | 3 | | BC06K-2F | 2'6" M908 EA END,15 SHIELDED TW | - | 2 |
| 4 | 4 | | 1214614-01 | FILTER,EMI,40 POS,BULKHEAD MTG H | - | 2 |
| 5 | 5 | | 9009701-00 | SCREW,PAN,PHIL,SEMS 6-32X .312L | - | 4 |
| 6 | 6 | A-PA-3700273-0-0 | 3700273-00 | INSTR PKG KIT OPTION IBV11-A | - | 1 |

| REVISION HISTORY | | | BASIC PART NO: DRV11 | | | |
|---|---|---|---|---|---|---|
| ENG | ECO NUMBER | REV | SECTION A OF A | | | |
| | INITIAL | C | SECTION. VARIATION INDEX<br>[A] 00,D | DRN: B. CSERPES | DATE: 30-MAR-82 | |
| | | | [B] | CHK'D: L. GILBERT' | DATE: 30-MAR-82 | |
| | | | [C] | DES.ENG.: J. CURTIS | DATE: 30-MAR-82 | |
| | | | [D] | RESP.ENG.: J. CURTIS | DATE: 30-MAR-82 | |
| | | | [E] | MFG.ENG.: N. POLLITT | DATE: 30-MAR-82 | |
| | | | [F] | ASSEMBLY NUMBER: | TOP DOCUMENT NUMBER: | |

| D | I | G | I | T | A | L |
|---|---|---|---|---|---|---|

TITLE PARTS LIST

16 BIT PARALLEL LINE UNIT (DRV11)

| DOCUMENT NUMBER | | | |
|---|---|---|---|
| SIZE | CODE | NUMBER | REV |
| K | PL | DRV11-0-DBP | C |
| FILE NAME: DRV11C.PLS | | | EDIT # 6 |

"THIS DRAWING AND SPECIFICATIONS HEREIN, ARE THE PROPERTY OF DIGITAL EQUIPMENT CORPORATION AND SHALL NOT BE REPRODUCED OR COPIED OR USED IN WHOLE OR IN PART AS THE BASIS FOR THE MANUFACTURE OR SALE OF ITEMS WITHOUT WRITTEN PERMISSION.
COPYRIGHT (C) 1982, DIGITAL EQUIPMENT CORPORATION "

3

"THIS DRAWING AND SPECIFICATIONS, HEREIN, ARE THE PROPERTY OF DIGITAL EQUIPMENT CORPORATION AND SHALL NOT BE REPRODUCED OR COPIED OR USED IN WHOLE OR IN PART AS THE BASIS FOR THE MANUFACTURE OR SALE OF ITEMS WITHOUT WRITTEN PERMISSION.
COPYRIGHT © 1977, DIGITAL EQUIPMENT CORPORATION"

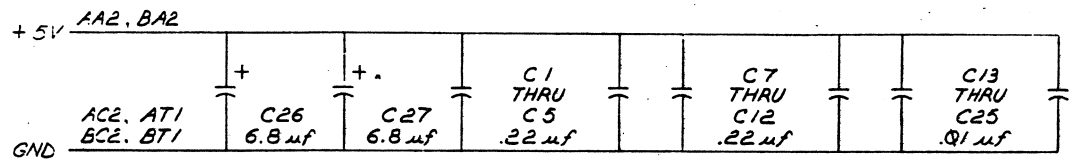


| IC PIN LOCATIONS | | |
|---|---|---|
| GND AND 5V ARE USUALLY PIN 7 AND 14 RESPECTIVELY EXCEPTIONS ARE STATED BELOW | | |
| IC TYPE | GND | +5V |
| I.C. DEC MM1 6330 | 8 | 16 |
| I.C. DEC 8837 | 8 | 16 |
| I.C. DEC 8641 | 8 | 16 |
| I.C. DEC 8136 | 8 | 16 |
| I.C. DEC 74175 | 8 | 16 |
| I.C. DEC 74157 | 8 | 16 |
| I.C. DEC 7384 | 1 | 8 |

NOTES:

1. THE JUMPERS ARE FACTORY SET FOR:
   ADDRESS = 16777X (ONLY W1 INSTALL).
   VECTOR = 300 (W15, 14 & 13 INSTALL).

THE JUMPERS ARE ASSIGNED AS FOLLOWS:

| A = ADDRESS | V = VECTOR |
|---|---|
| A3 - W10 | V3 - W15 |
| A4 - W9 | V4 - W14 |
| A5 - W8 | V5 - W13 |
| A6 - W7 | V6 - W12 |
| A7 - W6 | V7 - W11 |
| A8 - W5 | |
| A9 - W4 | |
| A10 - W3 | |
| A11 - W2 | |
| A12 - W1 | |

JUMPER IN = LOGIC Ø.
JUMPER OUT = LOGIC 1.

| REVISIONS | | |
|---|---|---|
| CHK | CHANGE NO. | REV. |
| JA | M7941-A8005 | H |
| | REVISED & REDRAWN | |
| | J. CURTIS | |
| JA | M7941-A8689 | J |
| | J. CURTIS | |

| | | |
|---|---|---|
| DRN. | | 5-16-75 |
| CHK'D | | 5-1-75 |
| ENG. | J. CYR | 6-12-75 |
| PROJ. ENG. | J. CYR | 6-12-75 |
| PROD. | D. DE ROAE | 6-12-75 |
| NEXT HIGHER ASSY. | D-UA-M7941-Ø-Ø | |
| SCALE | — | |
| SHEET | 1 OF 4 | |

FIRST USED ON: LSI11

TITLE: PARALLEL LINE UNIT

| SIZE | CODE | NUMBER | REV. |
|---|---|---|---|
| D | CS | M7941-Ø-1 | J |

DIST.

D CS M7941-Ø-1 J

THIS DRAWING AND SPECIFICATIONS, HEREIN, ARE THE PROPERTY OF DIGITAL EQUIPMENT CORPORATION AND SHALL NOT BE REPRODUCED OR COPIED OR USED IN WHOLE OR IN PART AS THE BASIS FOR THE MANUFACTURE OR SALE OF ITEMS WITHOUT WRITTEN PERMISSION. COPYRIGHT © 1972 DIGITAL EQUIPMENT CORPORATION

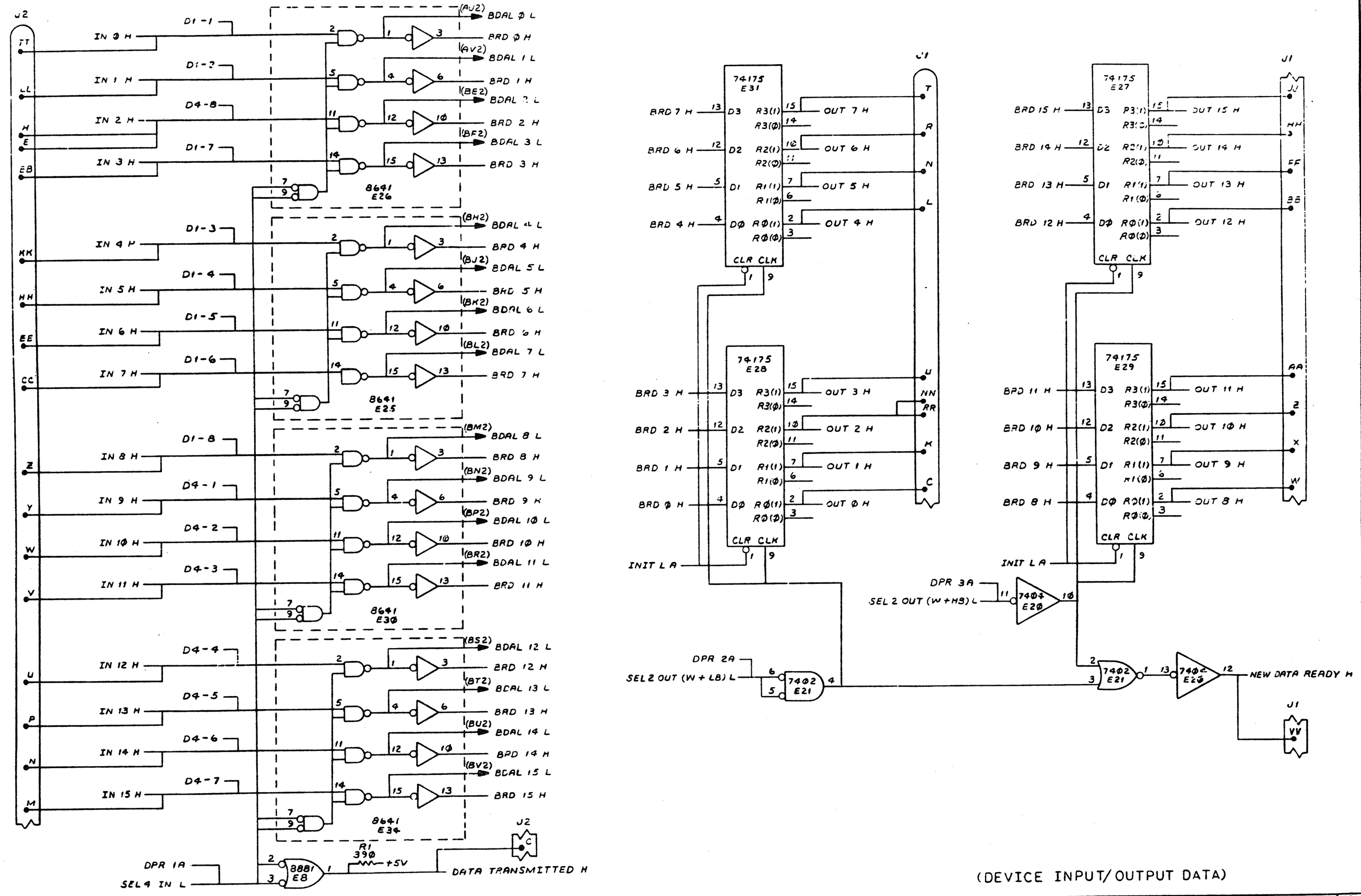


(DEVICE INPUT/OUTPUT DATA)

| REVISIONS | | |
|---|---|---|
| CHK | CHANGE NO. | REV |

| TITLE | SIZE | CODE | NUMBER | REV. |
|---|---|---|---|---|
| PARALLEL LINE UNIT | D | CS | M7941-Ø-1 | J |
| SCALE — | SHEET 2 OF 4 | DIST. | | |

PN 1

DEC FORM NO. 8MD 130

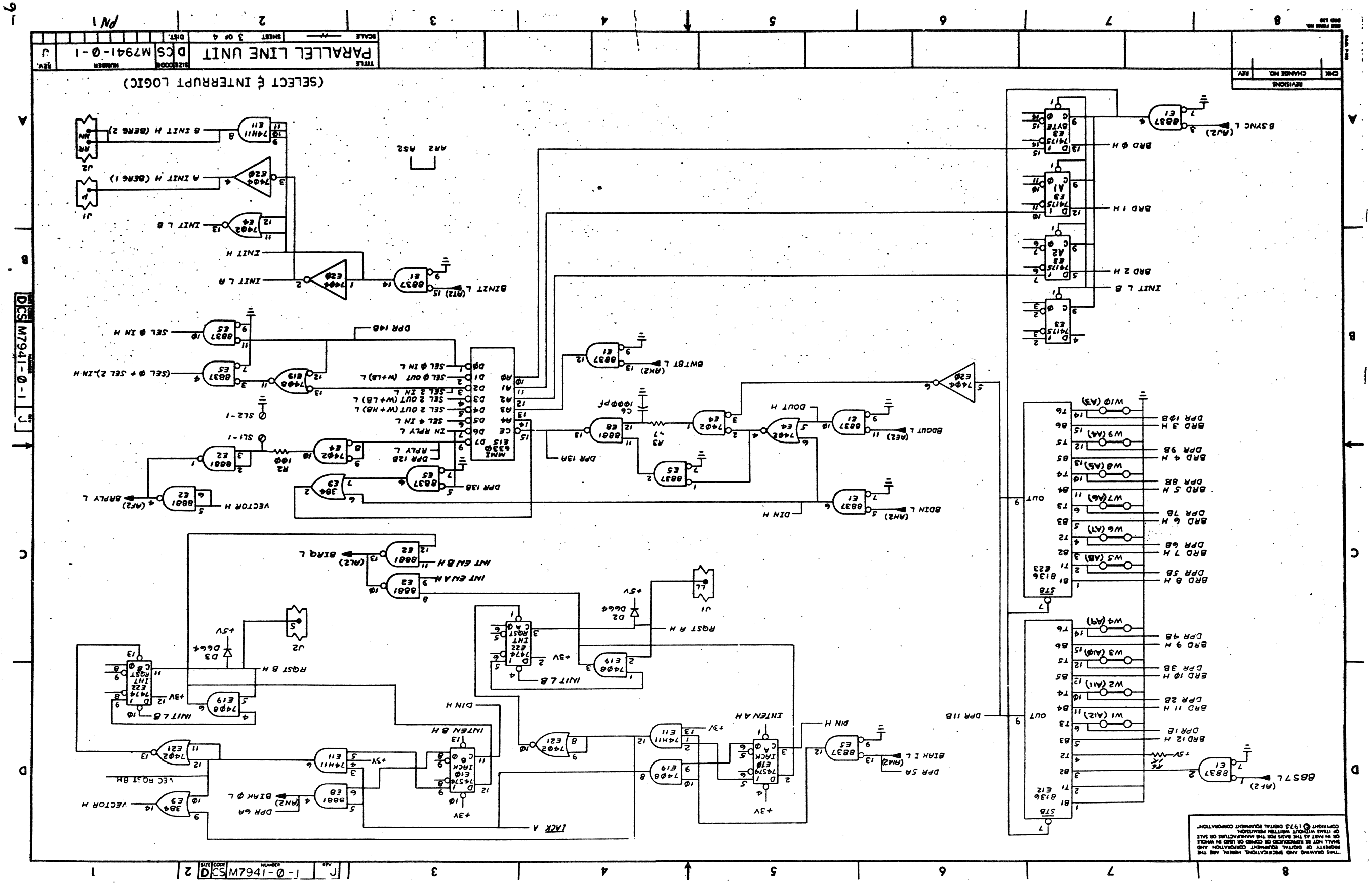
PARALLEL LINE UNIT
M7941-0-1
(SELECT & INTERRUPT LOGIC)
BDIN L
BDOUT L
BIAK I L
BIAK Ø L
BINT L
BINT L B
BIRQ L
BRPLY L
BSTBT L
BSYNC L
BWTBT L
DIN H
DOUT H
DPR 13A
DPR 13B
DPR 14B
DPR 11B
DPR 5A
DPR 6A
INTEN A H
INTEN B H
INIT L B
INIT H
INIT L R
INT EN A H
INT EN B H
RQST A H
RQST B H
VECTOR H
VEC RQST BH
A INIT H (BERG 1)
B INIT H (BERG 2)
MMI 6330
74LS74
74LS175
74LS244
74LS245
74LS32
74LS08
74LS02
74LS04
74LS11
74LS86
74LS38
74LS81
74LS37
74LS00
74LS21
74LS30
74LS136
74LS123
74LS175
74LS374
74LS139
74LS157
74LS174
74LS175
74LS244
74LS245

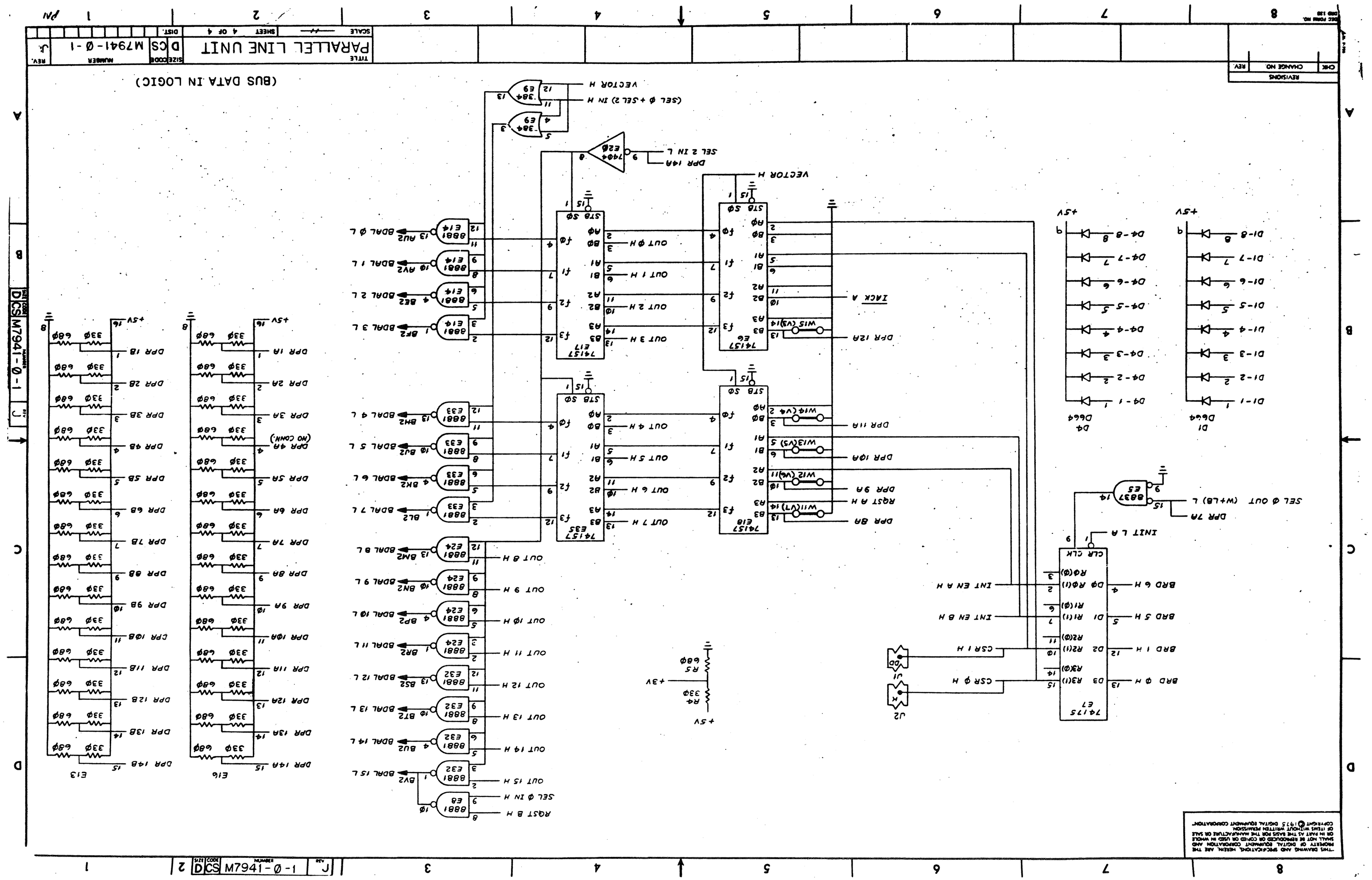
PARALLEL LINE UNIT
M7941-0-1
(BUS DATA IN LOGIC)
74157 E17
74157 E35
74157 E18
74157 E6
74175 E7
8881 E32
8881 E33
8881 E24
8881 E14
8881 E9
8881 E6
8837 E5
J2
J1
R4 330
R5 680
+5V
+3V
D1 D664
D4 D664
E13
E16
DPR 14A
DPR 14B
DPR 13A
DPR 13B
DPR 12A
DPR 12B
DPR 11A
DPR 11B
DPR 10A
DPR 10B
DPR 9A
DPR 9B
DPR 8A
DPR 8B
DPR 7A
DPR 7B
DPR 6A
DPR 6B
DPR 5A
DPR 5B
DPR 4A (NO CONN.)
DPR 4B
DPR 3A
DPR 3B
DPR 2A
DPR 2B
DPR 1A
DPR 1B
RQST B H
SEL Ø IN H
OUT 15 H
OUT 14 H
OUT 13 H
OUT 12 H
OUT 11 H
OUT 10 H
OUT 9 H
OUT 8 H
OUT 7 H
OUT 6 H
OUT 5 H
OUT 4 H
OUT 3 H
OUT 2 H
OUT 1 H
OUT Ø H
BDAL 15 L
BDAL 14 L
BDAL 13 L
BDAL 12 L
BDAL 11 L
BDAL 10 L
BDAL 9 L
BDAL 8 L
BDAL 7 L
BDAL 6 L
BDAL 5 L
BDAL 4 L
BDAL 3 L
BDAL 2 L
BDAL 1 L
BDAL Ø L
DPR 12A
DPR 11A
DPR 10A
DPR 9A
DPR 8A
DPR 7A
DPR 6A
DPR 5A
DPR 4A
DPR 3A
DPR 2A
DPR 1A
DPR 14A
SEL 2 IN L
(SEL Ø +SEL 2) IN H
VECTOR H
IACK A
CSR Ø H
CSR 1 H
INT EN B H
INT EN A H
BRD Ø H
BRD 1 H
BRD 5 H
BRD 6 H
INIT L A
SEL Ø OUT (W+LB) L
DPR 7A
DPR 8A
DPR 9A
DPR 10A
DPR 11A
DPR 12A
DPR 13A
DPR 14A
DPR 1B
DPR 2B
DPR 3B
DPR 4B
DPR 5B
DPR 6B
DPR 7B
DPR 8B
DPR 9B
DPR 10B
DPR 11B
DPR 12B
DPR 13B
DPR 14B
D1-1
D1-2
D1-3
D1-4
D1-5
D1-6
D1-7
D1-8
D4-1
D4-2
D4-3
D4-4
D4-5
D4-6
D4-7
D4-8
+5V
CLR CLK
CS M7941-0-1
DCS M7941-0-1
PARALLEL LINE UNIT
SCALE
SHEET 4 OF 4
DIST.
SIZE CODE NUMBER REV.
D CS M7941-0-1
REVISIONS
CHK CHANGE NO REV.
DEC FORM NO. DMS 139
"THIS DRAWING AND SPECIFICATIONS HEREIN, ARE THE PROPERTY OF DIGITAL EQUIPMENT CORPORATION AND SHALL NOT BE REPRODUCED OR COPIED OR USED IN WHOLE OR IN PART AS THE BASIS FOR THE MANUFACTURE OR SALE OF ITEMS WITHOUT WRITTEN PERMISSION
COPYRIGHT © 1975 DIGITAL EQUIPMENT CORPORATION"

# DIGITAL EQUIPMENT CORPORATION
MAYNARD, MASSACHUSETTS

# PARTS LIST

| | | |
|---|---|---|
| MADE BY Liz Hevesh | CHECKED D. Healy | SECTION 1 |
| DATE 1/19/76 | DATE 1/30/76 | |
| ENG Elizabeth H. Hevesh | PROD Don DeRosa | ISSUED SECT. 1 |
| DATE 2/23/76 | DATE 2/25/76 | |

| ITEM NO. | DWG NO./PART NO. | DESCRIPTION | QUANTITY/VARIATION DRV11-Ø |
|---|---|---|---|
| | MPØØØ54 | CUSTOMER PRINT SET DRV11 | *1 |
| * | MAINDEC-11-DVKAF-A-PB | DRV11 TEST | 1 |
| | 9905622 | SHIPPING CONTAINER DOUBLE HEIGHT | 1 |

* Note: These items are shipped with first ship to customer.

| TITLE | ASSY NO. | SIZE | CODE | NUMBER | REV. | ECO NO. |
|---|---|---|---|---|---|---|
| SHIPPING LIST | NONE | A | PL | DRV11-Ø-2 | | |
| | SHEET 1 OF 1 | DIST. | | | | |

DEC FORM DEC 16-(325)-1031-N870
DRA 110

PN

AUTOMATED BY PRTLST.3P(44)

# P A R T S  L I S T



| LINE | ITEM | DOCUMENT NUMBER | PART NUMBER | DESCRIPTION | QUANTITY PER VARIATION 0J | 1K | 7K | 4B | 9F | 2F |
|---|---|---|---|---|---|---|---|---|---|---|
| 1 | 1 | | 1700276-00 | CABLE,RIBBON 40COND 8"LG | 1 | 0 | 0 | 0 | 0 | 0 |
| 2 | 2 | | 1700276-01 | CABLE,RIBBON 40COND 21"LG | 0 | 1 | 0 | 0 | 0 | 0 |
| 3 | 3 | | 1700276-02 | CABLE,RIBBON 40COND 93"LG | 0 | 0 | 1 | 0 | 0 | 0 |
| 4 | 4 | | 1700276-03 | CABLE,RIBBON 40COND 50"LG | 0 | 0 | 0 | 1 | 0 | 0 |
| 5 | 5 | | 1700276-04 | CABLE,RIBBON 40COND 114"LG | 0 | 0 | 0 | 0 | 1 | 0 |
| 6 | 6 | | 1700276-05 | CABLE,RIBBON 40COND 30"LG | 0 | 0 | 0 | 0 | 0 | 1 |

| REVISION HISTORY | | | | BASIC PART NO: BC06K | | | |
|---|---|---|---|---|---|---|---|
| ENG | ECO NUMBER | REV | SECTION A OF A | DRN: S ZYLAK | DATE: 24-JAN-82 | D I G I T A L | |
| TO | BC06K-MK003 | C | SECTION, VARIATION INDEX [A] 0J,1K,7K,4B,9F,2F | CHK'D: J. Falkowski J FALKOWSKI | DATE: 24 JAN 1982 24-JAN-82 | TITLE PARTS LIST CABLE, MIRROR IMAGE | |
| | | | [B] | DES.ENG.: T ORR | DATE: 24-JAN-82 | | |
| | | | [C] | RESP.ENG.: T ORR | DATE: 24-JAN-82 | DOCUMENT NUMBER | |
| | | | [D] | | | SIZE / CODE / NUMBER | REV |
| | | | [E] | MFG.ENG.: E DERICK | DATE: 24-JAN-82 | K / PL / BC06K-0-0 | C |
| | | | [F] | ASSEMBLY NUMBER: D-UA-BC06K-0-0 | TOP DOCUMENT NUMBER: | FILE NAME: MK0626.PLS | EDIT # 3 |

"THIS DRAWING AND SPECIFICATIONS HEREIN, ARE THE PROPERTY OF DIGITAL EQUIPMENT CORPORATION AND SHALL NOT BE REPRODUCED OR COPIED OR USED IN WHOLE OR IN PART AS THE BASIS FOR THE MANUFACTURE OR SALE OF ITEMS WITHOUT WRITTEN PERMISSION.
COPYRIGHT (C) 1982, DIGITAL EQUIPMENT CORPORATION "

9