THE MATERIAL HEREIN IS FOR INFORMATION PURPOSES ONLY AND IS SUBJECT TO CHANGE WITHOUT NOTICE. DIGITAL EQUIPMENT CORPORATION ASSUMES NO RESPONSIBILITY FOR ANY ERRORS WHICH MAY APPEAR HEREIN.

FIELD MAINTENANCE PRINT SET

THIS DRAWING AND SPECIFICATIONS, HEREIN, ARE THE PROPERTY OF DIGITAL EQUIPMENT CORPORATION AND SHALL NOT BE REPRODUCED OR COPIED OR USED IN WHOLE OR IN PART AS THE BASIS FOR THE MANUFACTURE OR SALE OF ITEMS WITHOUT WRITTEN PERMISSION. COPYRIGHT © 1982 DIGITAL EQUIPMENT CORPORATION.

TABLE OF CONTENTS

B-TC-DZS11-EA	DZS11-EA (PRINT SET)
B-DD-DZS-E-0	DZS11-EA (DRAWING DIRECTORY)
B-DD-M7190-0	DZS11-EA (CONTROL)
D-UA-M7190-0-0	DZS11-EA (CONTROL UA)
K-PL-M7190-0-0	DZS11-EA (CONTROL PL)
D-CS-M7190-0-1	DZS11-EA (CONTROL CS)
D-UA-BC05C-0-0	CABLE, MODEM BC05C
D-UA-H883-0-0	H883 TEST CONNECTOR
D-CS-H883-0-1	H883 TEST CONNECTOR
K-PL-DZS-E	SHIPPING LIST DZS11-EA

UNIT VARIATIONS COVERED BY THIS PRINT SET
DZS11-EA

DZS11-EA

Field Maintenance Print Set

Digital Equipment Corporation

Print Set Order No.
MP01165-00

REVISIONS		
REV	C	
CHG. NO	INITIAL	
DATE		

USED ON OPTION/MODEL

SHEET 1 OF 1

DRN.	DATE	TITLE DZS11-EA
CHK'D	DATE	
PROJ. ENG.	DATE	
FIELD SERV.	DATE	

digital

SIZE	CODE	NUMBER	REV.
B	TC	DZS11-EA	C

DIST.

THE MATERIAL HEREIN IS FOR INFORMATION PURPOSES ONLY AND IS SUBJECT TO CHANGE WITHOUT NOTICE. DIGITAL EQUIPMENT CORPORATION ASSUMES NO RESPONSIBILITY FOR ANY ERRORS WHICH MAY APPEAR HEREIN.

DRAWING DIRECTORY

THIS DRAWING AND SPECIFICATIONS HEREIN, ARE THE PROPERTY OF DIGITAL EQUIPMENT CORPORATION AND SHALL NOT BE REPRODUCED OR COPIED OR USED IN WHOLE OR IN PART AS THE BASIS FOR THE MANUFACTURE OR SALE OF ITEMS WITHOUT WRITTEN PERMISSION. COPYRIGHT ©1982 DIGITAL EQUIPMENT CORPORATION

UNIT VARIATIONS

VAR	TITLE
DZS11-EA	DZS11-EA STATISTICAL MULTIPLEXER

REVISIONS

REV	CHG. NO.	DATE
C	INITIAL	

USED ON OPTION/MODEL

SHEET 1 OF 2

DRN.	G Robinson	DATE JUN-82
CHK'D.	[illegible]	DATE JUN-82
PROJ. ENG.	R. Starkey	DATE JUN-82
PROD.	G. Williams	DATE Jun-82

digital

TITLE DZS11-EA

SIZE	CODE	NUMBER	REV.
B	DD	DZS11-EA	C

DIST

FIND NO.	DRAWING NO.	DESCRIPTION	TYPE
	B-TC-DZS11-EA	DZS11-EA TABLE OF CONTENTS	
	MP01165-00	FIELD MAINTENANCE PRINT SET	
1	B-DD-M7190-0	DZS11-EA CONTROL	E/M
2	D-UA-BC05C-0-0	CABLE ASSY	E/M
3	D-UA-H883-0-0	H883 TEST CONNECTOR	E/M

FIND NO.	DRAWING NO.	DESCRIPTION	TYPE

TYPE: E ELECTRICAL
M MECHANICAL
E/M ELECTRO/MECHANICAL

digital

TITLE		SIZE	CODE	NUMBER	REV
DZS11-EA	Sheet 2 OF 2	B	DD	DZS11-EA	C

SIZE	CODE	NUMBER	REV
B	DD	M7190-0	C

DRAWING NO.	NO. OF SHTS	PART NO.	DESCRIPTION	REVISIONS
B-DD-M7190-0	1	M7190	DZS11-EA CONTROL	C
D-UA-M7190-0-0	5		DZS11-EA CONTROL	C
K-PL-M7190-0-0	4		DZS11-EA CONTROL	C
D-CS-M7190-0-1	14		DZS11-EA CONTROL	C
D-MD-M7190-0-0	5		DRILL AND ETCH DRAWING	D
		50-14716-00	ETCHED CIRCUIT BOARD	C

NOTES :

REVISIONS	
REV.	C
CHG NO.	INITIAL
DATE	

THIS DRAWING AND SPECIFICATIONS HEREIN ARE THE PROPERTY OF DIGITAL EQUIPMENT CORPORATION AND SHALL NOT BE REPRODUCED OR COPIED OR USED IN WHOLE OR IN PART AS THE BASIS FOR THE MANUFACTURE OR SALE OF ITEMS WITHOUT WRITTEN PERMISSION
COPYRIGHT ©1982 DIGITAL EQUIPMENT CORPORATION

digital

EQUIPMENT AUSTRALIA PTY. LTD.

USED ON OPTION/MODEL: DZS11-EA

DRN.	G.Kolinsau	JUN-82
CHK'D.	[illegible]	JUN-82
ENG.	R.Starkey	JUN-82
PROD.	[illegible]	JUN-82

TITLE: DZS11-EA CONTROL

SIZE	CODE	NUMBER	REV.
B	DD	M7190-0	C

SHEET 1 OF 1

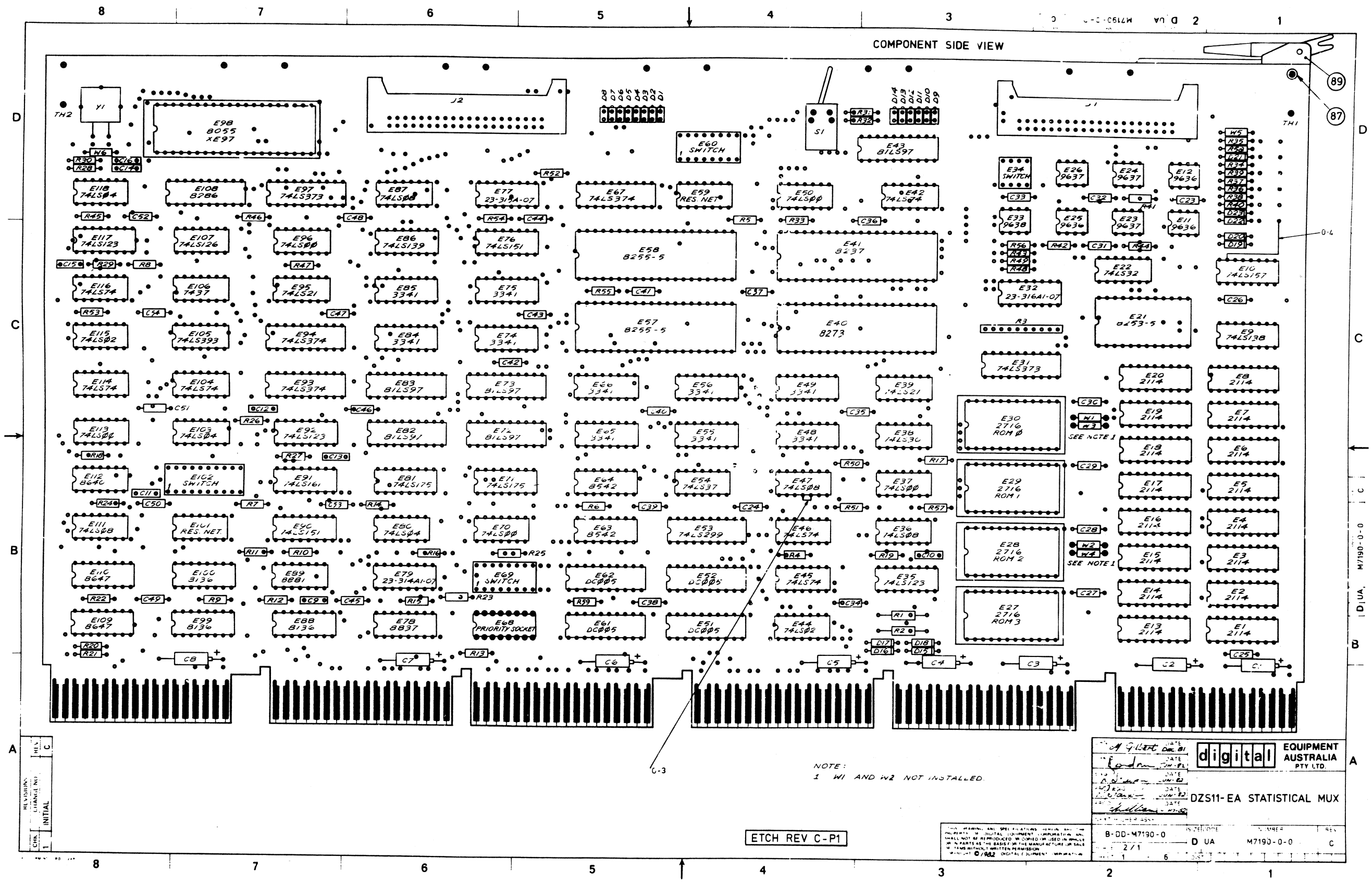
COMPONENT SIDE VIEW
E98 8055 XE97
J2
J1
E60 SWITCH
S1
E43 81LS97
E34 SWITCH
E26 9637
E24 9637
E12 9636
E118 74LS04
E108 8286
E97 74LS373
E87 74LS08
E77 23-316A-07
E67 74LS374
E59 RES NET
E50 74LS00
E42 74LS74
E33 9638
E25 9636
E23 9637
E11 9636
E117 74LS123
E107 74LS126
E96 74LS00
E86 74LS139
E76 74LS151
E58 8255-5
E41 8237
E116 74LS74
E106 7437
E95 74LS21
E85 3341
E75 3341
E32 23-316A1-07
E22 74LS32
E10 74LS157
E115 74LS02
E105 74LS393
E94 74LS374
E84 3341
E74 3341
E57 8255-5
E40 8273
E21 8253-5
E9 74LS138
E31 74LS373
E114 74LS74
E104 74LS74
E93 74LS374
E83 81LS97
E73 81LS97
E66 3341
E56 3341
E49 3341
E39 74LS21
E20 2114
E8 2114
E30 2716 ROM 0
SEE NOTE 1
E113 74LS00
E103 74LS04
E92 74LS123
E82 81LS97
E72 81LS97
E65 3341
E55 3341
E48 3341
E38 74LS30
E19 2114
E7 2114
E112 8640
E102 SWITCH
E91 74LS161
E81 74LS175
E71 74LS175
E64 8542
E54 74LS37
E47 74LS08
E37 74LS00
E29 2716 ROM 1
E17 2114
E6 2114
E111 74LS08
E101 RES. NET.
E90 74LS151
E80 74LS04
E70 74LS00
E63 8542
E53 74LS299
E46 74LS74
E36 74LS08
E28 2716 ROM 2
SEE NOTE 1
E16 2114
E5 2114
E4 2114
E110 8647
E100 8136
E89 8881
E79 23-314A1-07
E69 SWITCH
E62 DC005
E52 DC005
E45 74LS74
E35 74LS123
E15 2114
E3 2114
E109 8647
E99 8136
E88 8136
E78 8837
E68 PRIORITY SOCKET
E61 DC005
E51 DC005
E44 74LS02
E27 2716 ROM 3
E14 2114
E2 2114
E13 2114
E1 2114
NOTE:
1 W1 AND W2 NOT INSTALLED.
ETCH REV C-P1
digital EQUIPMENT AUSTRALIA PTY LTD.
DZS11-EA STATISTICAL MUX
B-DD-M7190-0
D UA
M7190-0-0
C

THIS DRAWING AND SPECIFICATIONS, HEREIN, ARE THE PROPERTY OF DIGITAL EQUIPMENT CORPORATION AND SHALL NOT BE REPRODUCED OR COPIED OR USED IN WHOLE OR IN PARTS AS THE BASIS FOR THE MANUFACTURE OR SALE OF ITEMS WITHOUT WRITTEN PERMISSION.
COPYRIGHT © 1982 DIGITAL EQUIPMENT CORPORATION

LAYER L1

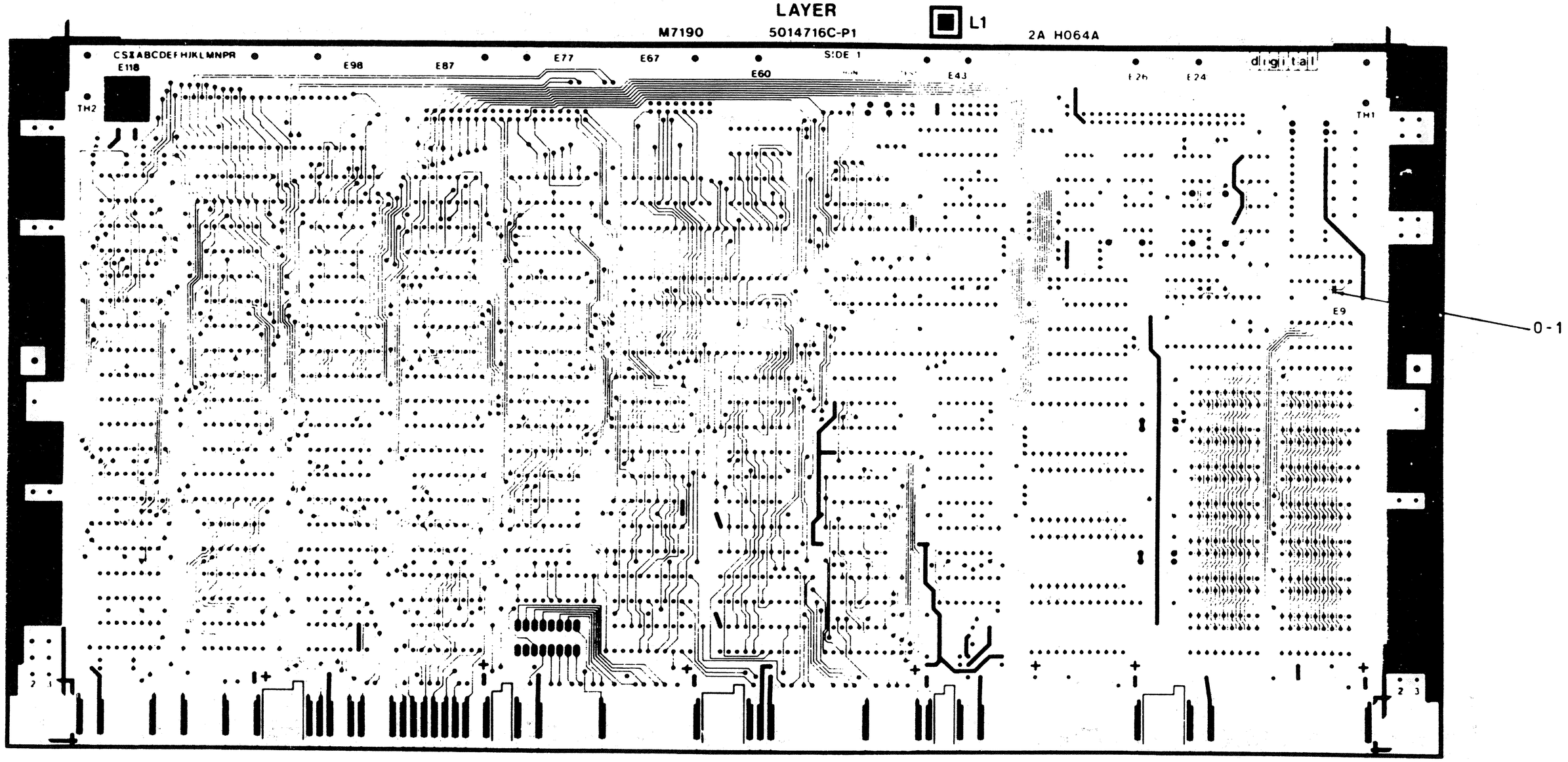

REVISIONS		
CHK	CHANGE NO	REV

ETCH REV C-P1

TITLE	SIZE	CODE	NUMBER	REV
DZS11-EA STATISTICAL MUX	C	UA	M7190-0-0	C
SCALE 1/1 SHEET 2 OF 6	DIST			

THIS DRAWING AND SPECIFICATIONS, HEREIN, ARE THE PROPERTY OF DIGITAL EQUIPMENT CORPORATION AND SHALL NOT BE REPRODUCED OR COPIED OR USED IN WHOLE OR IN PARTS AS THE BASIS FOR THE MANUFACTURE OR SALE OF ITEMS WITHOUT WRITTEN PERMISSION
COPYRIGHT © 1982 DIGITAL EQUIPMENT CORPORATION"

LAYER 2 L2

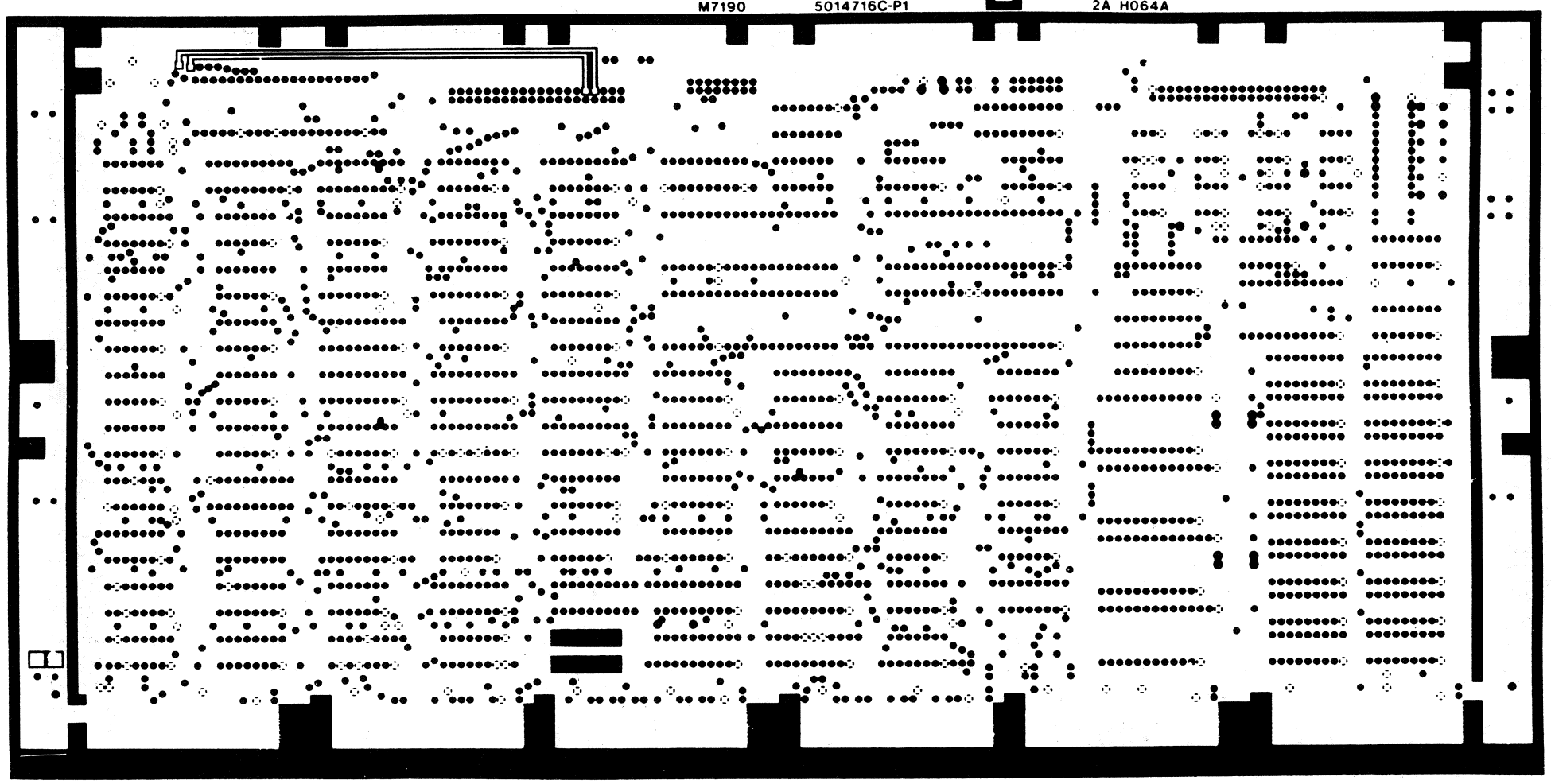

REVISIONS		
CHK	CHANGE NO	REV

ETCH REV C-P1

TITLE	SIZE	CODE	NUMBER	REV
DZS11-EA STATISTICAL MUX	C	UA	M7190-0-0	C
SCALE 1/1	SHEET 3 OF 6		DIST	

REV C
NUMBER M7190-0-0
SIZE C CODE UA

"THIS DRAWING AND SPECIFICATIONS, HEREIN, ARE THE PROPERTY OF DIGITAL EQUIPMENT CORPORATION AND SHALL NOT BE REPRODUCED OR COPIED OR USED IN WHOLE OR IN PARTS AS THE BASIS FOR THE MANUFACTURE OR SALE OF ITEMS WITHOUT WRITTEN PERMISSION
COPYRIGHT © 1982 DIGITAL EQUIPMENT CORPORATION"

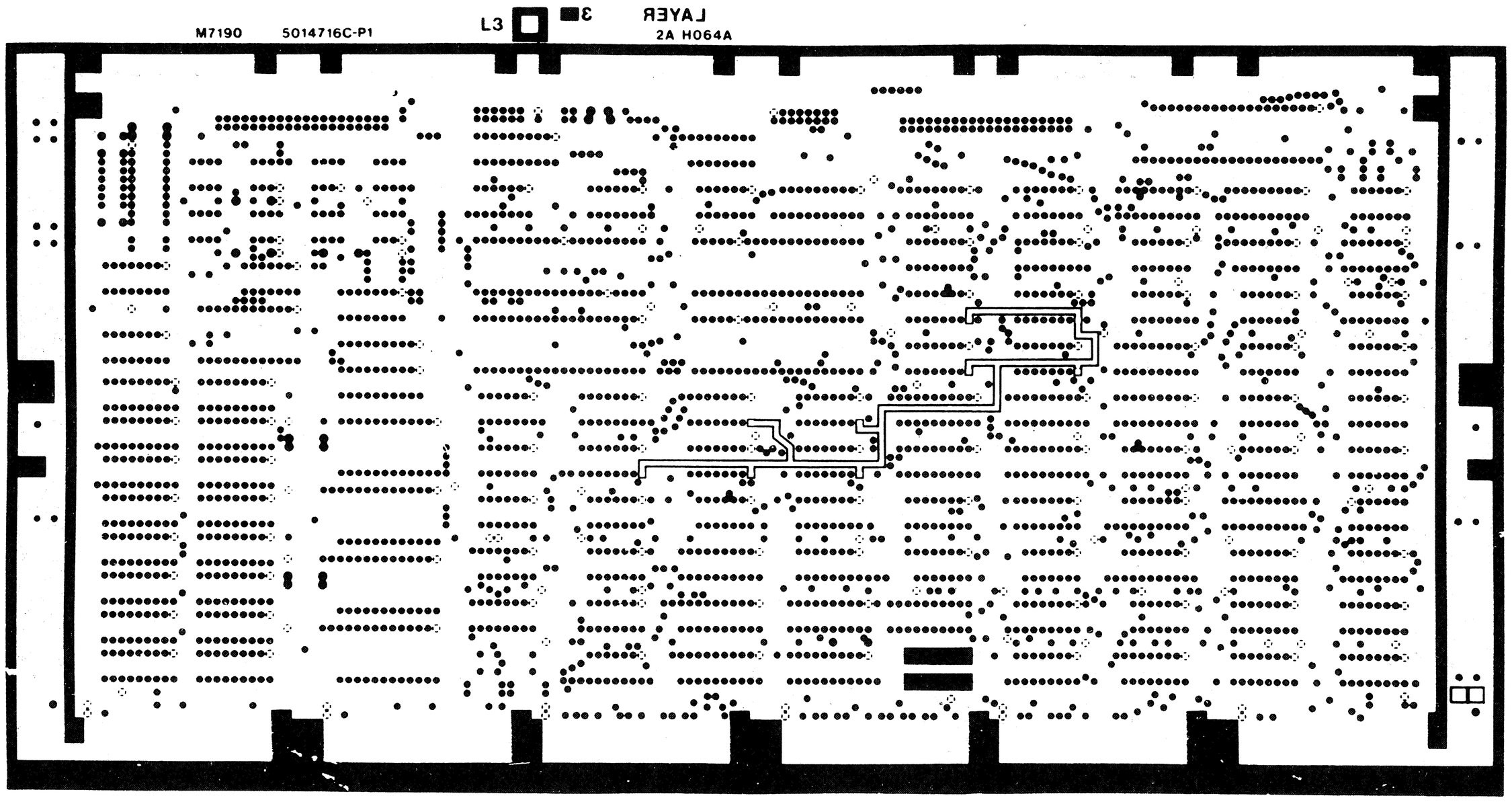

REVISIONS		
CHK	CHANGE NO	REV

ETCH REV C-P1

TITLE	SIZE	CODE	NUMBER	REV
DZS11-EA STATISTICAL MUX	C	UA	M7190-0-0	C
SCALE 1/1	SHEET 4 OF 6		DIST	

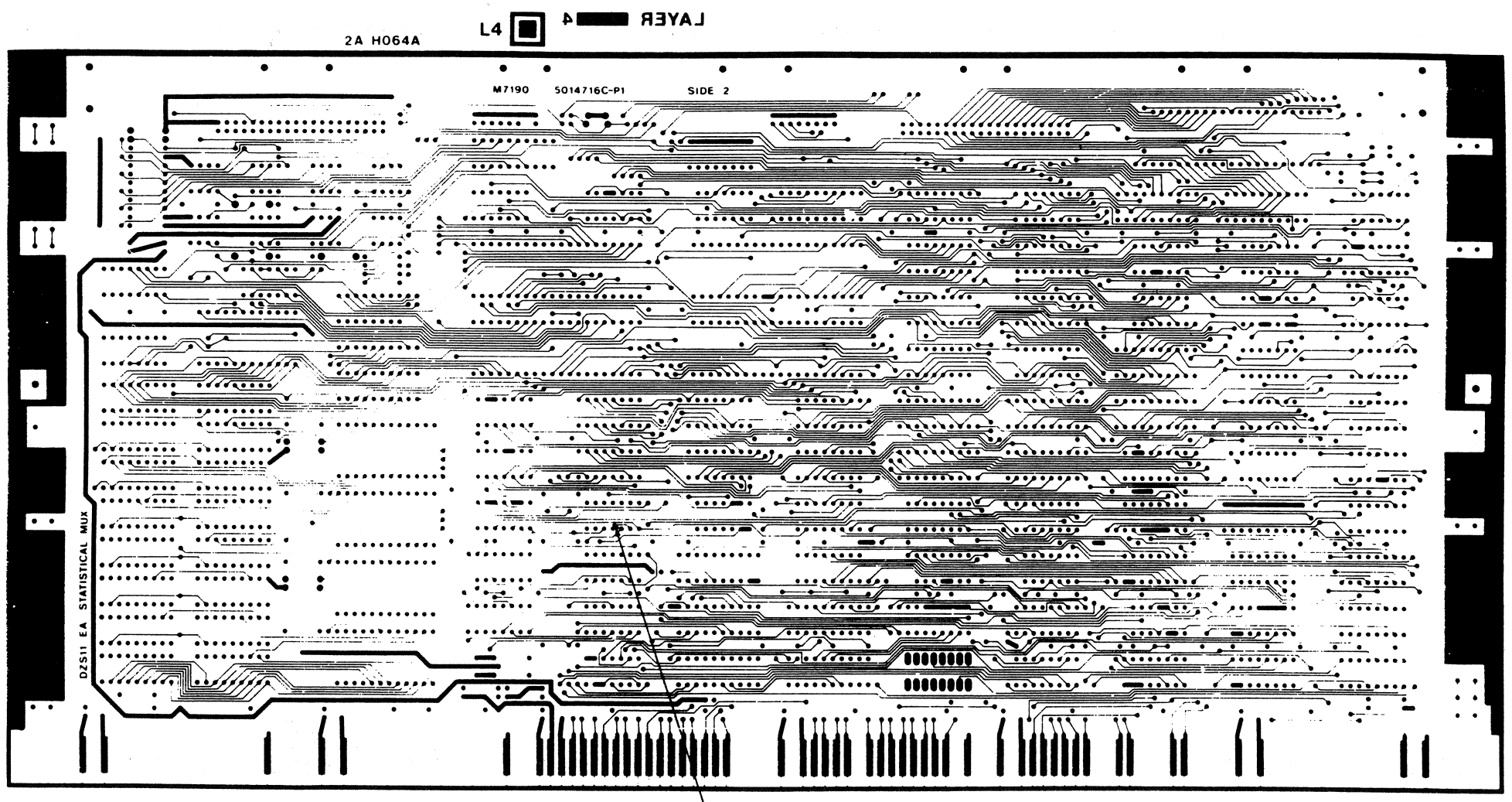

REVISIONS		
CHK	CHANGE NO	REV

ETCH REV C-P1

TITLE	SIZE	CODE	NUMBER	REV
DZS11-EA STATISTICAL MUX	C	UA	M7190-0-0	C
SCALE 1/1	SHEET 5 OF 6		DIST	

REV C
NUMBER M7190-0-0
SIZE C CODE UA

"THIS DRAWING AND SPECIFICATIONS, HEREIN, ARE THE PROPERTY OF DIGITAL EQUIPMENT CORPORATION AND SHALL NOT BE REPRODUCED OR COPIED OR USED IN WHOLE OR IN PARTS AS THE BASIS FOR THE MANUFACTURE OR SALE OF ITEMS WITHOUT WRITTEN PERMISSION
COPYRIGHT © 1982 DIGITAL EQUIPMENT CORPORATION"

ETCH CUT LAYER 1

0-1 AT E10-8

ETCH CUT LAYER 4

0-2 AT E47-4

WIRE ADD LAYER 1

0-3 FROM E47-4 TO E47-5
0-4 FROM E10-15 TO GND.

REVISIONS		
CHK	CHANGE NO	REV

ETCH REV C-P1

TITLE	SIZE	CODE	NUMBER	REV
DZS11-EA STATISTICAL MUX	C	UA	M7190-0-0	C
SCALE —	SHEET 6 OF 6	DIST		

DEC FORM NO DRC 111

LINE	ITEM	DOCUMENT NUMBER	PART NUMBER	DESCRIPTION	QTY PER VARIATION 00	REFERENCE DESIGNATOR
1	1	D-MD-5014716-0-0	5014716	ETCHED CIRCUIT BOARD	1	
2	2		1000006-00	10.0 MMF 100V 5% 200 PPM	1	C15
3	3		1000021-00	220.0 MMF 100V 5% 200 PPM	2	C14,C16
4	4		1000025-00	560.0MMF 100V 5% 200 PPM	2	C9,C11
5	5		1000042-00	1000.0 MMF 100V 5% 200 PPM	8	C12,C13,C17 THRU C22
6	6		1001739-00	27.0 MMF 100V 5% 200 PPM	1	C10
7	7		1005306-00	6.8 MFD 35V 10% S.TANT	8	C1 THRU C8
8	8		1012784-00	.047 MFD 50V -20 +80 CER	32	C23 THRU C54
9	9		1100114-00	D664 QS/75 PCB PIV = 25V SP	6	D18 THRU D23
10	10		1103340-00	IN 4736A VZ = 6.8 5% 1W	1	D16
11	11		1105796-00	IN 4004 PIV = 400 I=1A	1	D15
12	12		1109943-00	IN 4733A VZ = 5.1 5% 1W	1	D17
13	13		1114136-01	LED 5.6 MA 5V	14	D1 THRU D14
14	14		1209838-00	SOCKET 16 PIN	1	E68
15	15		1209941-02	HEADER 100 40POS RT ANGLE	2	J1,J2
16	16		1210209-00	SW,TOG,SPDT, .01A @ 6V, ON, ON	1	S1
17	17		1211164-00	SW,DIP 1P 1A 4 POS	1	E34
18	18		1211164-04	SW,DIP 1P 1A 8 POS	2	E60,E69
19	19		1211164-06	SW,DIP 1P 1A 10 POS	1	E102
20	20		1215006-06	SOCKET 24 PIN IC LOW PROFILE	4	XE27 THRU XE30
21	21		1215006-08	SOCKET 40 PIN IC LOW PROFILE	1	XE98
22	22		1300005-01	R NETWORK 13-1K 5.0% 14 PIN	1	E59
23	23		1300005-03	R NETWORK 13-10K 5.0% 14 PIN	1	E101
24	24		1300229-00	100.0 .25W 5.0% CC	1	R12
25	25		1300309-00	390.0 .25W 5.0% CC	2	R9,R21
26	26		1300365-00	1.0K .25W 5.0% CC	24	R4 THRU R8,R10,R11,R13 THRU R18,
27						R22,R31,R32,R52 THRU R58.
28	27		1300447-00	4.7K .25W 5.0% CC	11	R29,R33,R43,R45 THRU R51,R59
29	28		1300479-00	10.0K .25W 5.0% CC	1	R27
30	29		1301322-00	180.0 .25W 5.0% CC	5	R20,R23,R24,R28,R30

REVISION HISTORY			BASIC PART NO:			
ENG	ECO HISTORY	REV	SECTION A OF A	DRN: C. ROLINSON	DATE: 11-JUN-82	D I G I T A L
	INITIAL	C	SECTION VARIATION INDEX	CHK'D: D. KNOX	DATE: 11-JUN-82	TITLE PARTS LIST
			[A] 00			M7190
			[B]			
			[C]	DES ENG: R. STARKEY	DATE: 11-JUN-82	
			[D]			
			[E]			DOCUMENT NUMBER
			[F]	RESP. ENG.: R. STARKEY	DATE: 11-JUN-82	
			[H]			SIZE CODE NUMBER REV
			[J]			
			[K]	MFG. ENG.: A. WILLIAMS	DATE: 11-JUN-82	K PL M7190-0-0 C
			[L]			
			[M]	ASSEMBLY NUMBER:	TOP DOCUMENT NUMBER	FILE NAME. EDIT #
			[N]	D-UA-M7190-0-0	B-DD-M7190-0	KPLM7190 4

"THIS DRAWING AND SPECIFICATIONS HEREIN, ARE THE PROPERTY OF DIGITAL EQUIPMENT CORPORATION AND SHALL NOT BE REPRODUCED OR COPIED OR USED IN WHOLE OR PART AS THE BASIS FOR THE MANUFACTURE OR SALE OF ITEMS WITHOUT WRITTEN PERMISSION. COPYRIGHT (C) 1982. DIGITAL EQUIPMENT CORPORATION "

P A R T S L I S T

LINE	ITEM	DOCUMENT NUMBER	PART NUMBER	DESCRIPTION	QTY PER VARIATION 00	REFERENCE DESIGNATOR
31	30		1301424-00	680.0 .25W 5.0% CC	1	R25
32	31		1301695-00	47.0 .50W 5.0% CC	2	R1, R2
33	32		1301808-00	22.0K .25W 5.0% CC	9	R34, R36 THRU R42, R44
34	33		1302177-00	47.0K .25W 5.0% CC	1	R26
35	34		1302465-00	18.0K .25W 5.0% CC	1	R19
36	35		1310881-03	100.0 .25W 5.0% FUSE	1	R35
37	36		1316395-02	R NETWORK 9-1.0K 2% 10 PIN SIP	1	R3
38	37		1812396-05	XTAL 6.144 MHZ	1	Y1
39	38		1909705-00	DEC 8881 NAND GATE-QUAD	1	E89
40	39		1910091-00	DEC 7437 AND GATE-QUAD	1	E106
41	40		1911116-00	DEC 8837 RECEIVER, BUS, HEX	1	E78
42	41		1911469-00	DEC 8640 RECEIVER, BUS, QUAD	1	E112
43	42		1912395-00	8136 COMPARATOR - 6 BIT UNIFIED	3	E88, E99, E100
44	43		1912799-00	74LS00 NAND GATE-QUAD	5	E37, E50, E70, E96, E113
45	44		1912801-00	74LS02 NOR-GATE-QUAD	2	E44, E115
46	45		1912803-00	74LS04 INVERTER GATE-HEX	3	E80, E103, E118
47	46		1912805-00	74LS08 AND GATE-QUAD	4	E36, E47, E87, E111
48	47		1912811-00	74LS21 AND GATE-DUAL	2	E39, E95
49	48		1912815-00	74LS30 NAND GATE-SINGLE	1	E38
50	49		1912816-00	74LS32 OR GATE-QUAD 2IN	1	E22
51	50		1912817-00	74LS37 NAND GATE-QUAD	1	E54
52	51		1912824-00	74LS74 FF-D DUAL, EDGE TRIG	6	E42, E45, E46, E104, E114, E116
53	52		1912837-00	74LS123 ONE SHOT-DUAL	3	E35, E92, E117
54	53		1912842-00	74LS138 DECODER-THREE INPUT	1	E9
55	54		1912843-00	74LS139 DECODER, 2 OF 4 (DUAL)	1	E86
56	55		1912844-00	74LS151 MUX 1 OF 8	2	E76, E90
57	56		1912847-00	74LS157 MUX 1 OF 2 (QUAD)	1	E10
58	57		1912849-00	74LS161 MUX 1 OF 2 (QUAD)	1	E91
59	58		1912853-00	74LS175 FF-D QUAD	2	E71, E81
60	59		1912868-00	74LS299 SHIFT REG. 8-BIT	1	E53
61	60		1913040-00	DC005 TRANSCEIVER 4 BIT	4	E51, E52, E61, E62
62	61		1914083-00	8542 REGISTER, I/O-QUAD, TRI-STA	2	E63, E64
63	62		1914213-00	81LS97 BUFFER GATE-OCTAL	5	E43, E72, E73, E82, E83
64	63		1914214-00	74LS374 FF-D OCTAL EDGE TRIG	3	E67, E93, E94
65	64		1914438-00	DC013 UNIBUS INTERRUPT	2	E109, E110
66	65		1914451-00	74LS393 COUNTER, BINARY, 4 BIT	1	E105
67	66		1915219-00	74LS373 FF-D OCTAL TRANSPARENT	2	E31, E97
68	67		1915415-00	9636 DRIVER, DUAL, EIA RS-423	3	E11, E12, E25
69	68		1915416-00	9637 RECEIVER, DUAL, RS-422/3	3	E23, E24, E26
70	69		1915417-00	9638 DRIVER, DUAL, EIA RS-422	1	E33
71	70		1916079-00	8253-5 TIMER, PROGRAMMABLE	1	E21
72	71		1916139-00	74LS126A DRIVER, BUS, QUAD	1	E107
73	72		1920433-01	8286 BUS TRANSCEIVER	1	E108
74	73		1920545-01	8273-4 HDLC CONTROLER	1	E40
75	74		2120070-01	8237-5 DMA CONTROLLER	1	E41
76	75		2111188-02	DEC 3341-2 64X4 FIFO MEMORY	10	E48, E49, E55, E56, E65, E66, E74, E75
77						E84, E85
78	76		2113894-02	8255A-5 PROGRAMMABLE INTERFACE	2	E57, E58

D	I	G	I	T	A	L	TITLE	SECTION A OF A	SIZE K	CODE PL	DOCUMENT NUMBER	REV
							M7190				M7190-0-0	C

P A R T S L I S T

LINE	ITEM	DOCUMENT NUMBER	PART NUMBER	DESCRIPTION	QTY PER VARIATION 00	REFERENCE DESIGNATOR
79	77		2114212-00	2114-2 RAM, 1024X4, STATIC	16	E1 THRU E8, E13 THRU E20
80	78		2114963-00	UP 8BIT NMOS	1	E98
81	79		23314A1-00	32 X 8,TTL, PROM A	1	E79
82	80		23315A1-00	32 X 8,TTL, PROM B	1	E77
83	81		23316A1-00	32 X 8,TTL, PROM C	1	E32
84	82		23289E2-00	2048 X 8,TTL, EPROM 0	1	E30
85	83		23290E2-00	2048 X 8,TTL, EPROM 1	1	E29
86	84		23291E2-00	2048 X 8,TTL, EPROM 2	1	E28
87	85		23292E2-00	2048 X 8,TTL, EPROM 3	1	E27
88	86		5408778	PLUG PRIORITY #5	1	E68
89	87		9000024-01	EYELET	12	
90	88		9009185-00	WIRE LINK	4	W3,W4,W5,W6
91	89		1216988-02	HANDLE,MODULE,HEX TWO EJECTORS	1	

"THIS DRAWING AND SPECIFICATIONS, HEREIN, ARE THE PROPERTY OF DIGITAL EQUIPMENT CORPORATION AND SHALL NOT BE REPRODUCED OR COPIED OR USED IN WHOLE OR IN PARTS AS THE BASIS FOR THE MANUFACTURE OR SALE OF ITEMS WITHOUT WRITTEN PERMISSION.
COPYRIGHT © 1982 DIGITAL EQUIPMENT CORPORATION"

POWER AND GROUND TABLE FOR IC's

	GND	+5V	+V	-11V	-12
STD 14 PIN	7	14	–	–	–
STD 16 PIN	8	16	–	–	–
STD 18 PIN	9	18	–	–	–
STD 20 PIN	10	20	–	–	–
STD 24 PIN	12	24	–	–	–
STD 28 PIN	14	28	–	–	–
STD 40 PIN	20	40	–	–	–
3341	8	16	–	–	1
9636	4	–	8	5	–
9637	4	1	–	–	–
9638	4	1	–	–	–
8237	20	31	–	–	–
8255A	7	26	–	–	–

SIGNAL NAMES HAVE THE FOLLOWING FORMAT

(A) Sx NAME H
Sx NAME L
(B) XXX NAME H
XXX NAME L

WHERE
"Sx" IS A SHEET NUMBER WHERE SIGNAL ORIGINATES
XXX IS A BACKPLANE SLOT AND A PIN DESIGNATOR
EXAMPLE: AA2 = SECTION A PIN A2
CT1 = SECTION C PIN T1

"NAME" IS THE SIGNAL MNEMONIC
H OR L IS THE LEVEL FOR THE SIGNALS TRUE OR LOGICAL ONE VALUE H = HIGH; L = LOW.

SEE NOTES SHEET 14

MNEMONICS USED BY THIS PRINT SET

A	=	MICROCONTROLLER ADDRESS BUS
AENA	=	MICROCONTROLLER ADDRESS ENABLE
BAD	=	MICROCONTROLLER BUFFERED ADDRESS DATA BUS
BALE	=	MICROCONTROLLER BUFFERED ADDRESS LATCH
BR	=	BUS REQUEST
BRD	=	MICROCONTROLLER BUFFERED READ
BUF	=	BUFFER
BUS	=	UNIBUS
BWR	=	MICROCONTROLLER BUFFERED READ
COMM	=	COMMUNICATION
CSR	=	CONTROL AND STATUS REGISTER
DMA	=	DIRECT MEMORY ACCESS
DSC	=	DATA SET CONTROL
DTR	=	DATA TERMINAL READY
ENA	=	ENABLE
EXT	=	EXTERNAL
HOLDA	=	HOLD ACKNOWLEDGE
HOLD	=	DMA REQUEST
INIT	=	INITIALISE
INTA	=	INTERRUPT REQUEST ACKNOWLEDGE
INTR	=	INTERRUPT
IOM	=	MICROCONTROLLER MEMORY PAGE SELECT
LCS	=	LINE CONTROL AND STATUS
LD	=	LOAD
LINE	=	UNIBUS TRANSMIT ENABLE
M	=	MASTER
MAINT	=	MAINTENANCE
MEM	=	MICROCONTROLLER MEMORY
MICRO	=	MICROCONTROLLER
PIE	=	PROGRAMMABLE INTERFACE ELEMENT
R BUF	=	RECEIVER BUFFER
RD	=	MICROCONTROLLER READ
RDY	=	READY
REC	=	RECEIVER
REQ	=	REQUEST
SEL	=	SELECT
SW	=	SWITCH
TCR	=	TRANSMIT CONTROL REGISTER
TS BUS	=	TRI STATE BUS
WR	=	MICROCONTROLLER WRITE
XMIT	=	TRANSMIT

THE FOLLOWING SYMBOLS INDICATE SPARE LOGIC AND CIRCUIT ELEMENTS

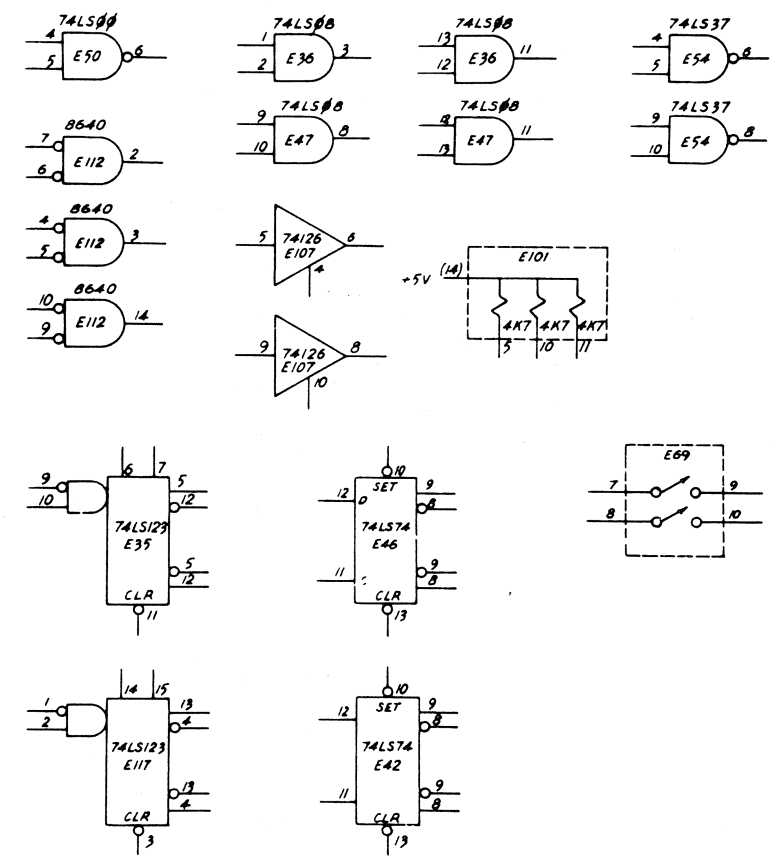

NOTE C17 THRU C22 NOT INSTALLED

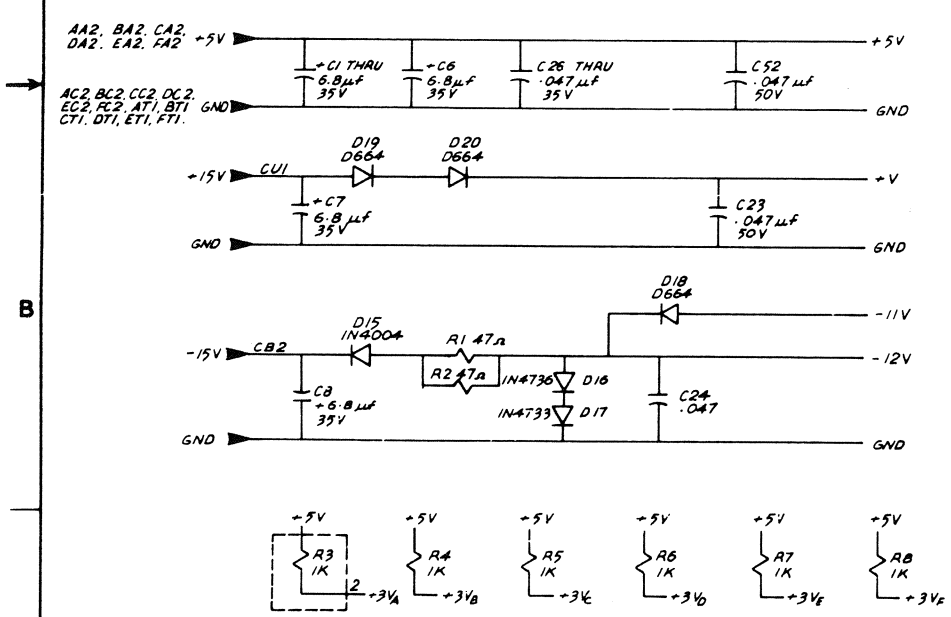

NOTE:
UNLESS OTHERWISE SPECIFIED:
RESISTORS ARE 1/4 W, 5%

REVISIONS		
CHG.	CHANGE NO.	REV.
	INITIAL	C

QTY	DESCRIPTION	PART NO.	ITEM NO.
	PARTS LIST		

DRN	DATE MAY-82	digital EQUIPMENT AUSTRALIA PTY. LTD.
CHKD	DATE JUN-82	
ENG	DATE	DZS11-EA STATISTICAL MUX
PROJ ENG	DATE	
PROD	DATE	
NEXT HIGHER ASSY.		
D-UA-M7190-0-0	SIZE D / CODE CS	NUMBER M7190-0-1 / REV C
SCALE		
SHEET 1 OF 14	DIST.	

"THIS DRAWING AND SPECIFICATIONS, HEREIN, ARE THE PROPERTY OF DIGITAL EQUIPMENT CORPORATION AND SHALL NOT BE REPRODUCED OR COPIED OR USED IN WHOLE OR IN PARTS AS THE BASIS FOR THE MANUFACTURE OR SALE OF ITEMS WITHOUT WRITTEN PERMISSION.
COPYRIGHT © 1982 DIGITAL EQUIPMENT CORPORATION"

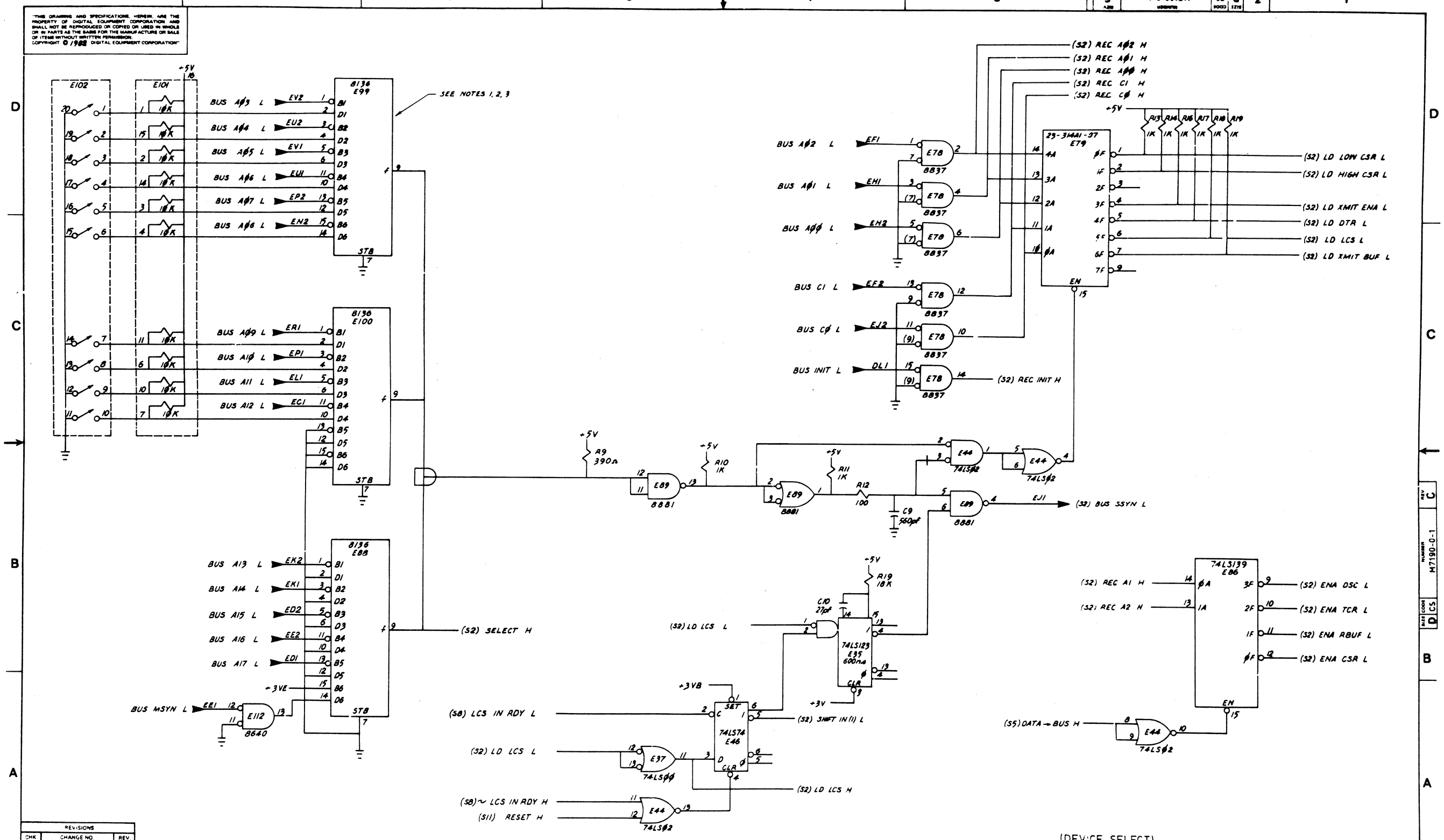

(DEVICE SELECT)

REVISIONS		
CHK	CHANGE NO.	REV

TITLE	SIZE	CODE	NUMBER	REV
DZS11-EA STATISTICAL MUX (S2)	D	CS	M7190-0-1	C
SCALE —	SHEET 2 OF 14	DIST		

DEC FORM NO DRB-150

"THIS DRAWING AND SPECIFICATIONS, HEREIN, ARE THE PROPERTY OF DIGITAL EQUIPMENT CORPORATION AND SHALL NOT BE REPRODUCED OR COPIED OR USED IN WHOLE OR IN PARTS AS THE BASIS FOR THE MANUFACTURE OR SALE OF ITEMS WITHOUT WRITTEN PERMISSION. COPYRIGHT © 1972 DIGITAL EQUIPMENT CORPORATION"

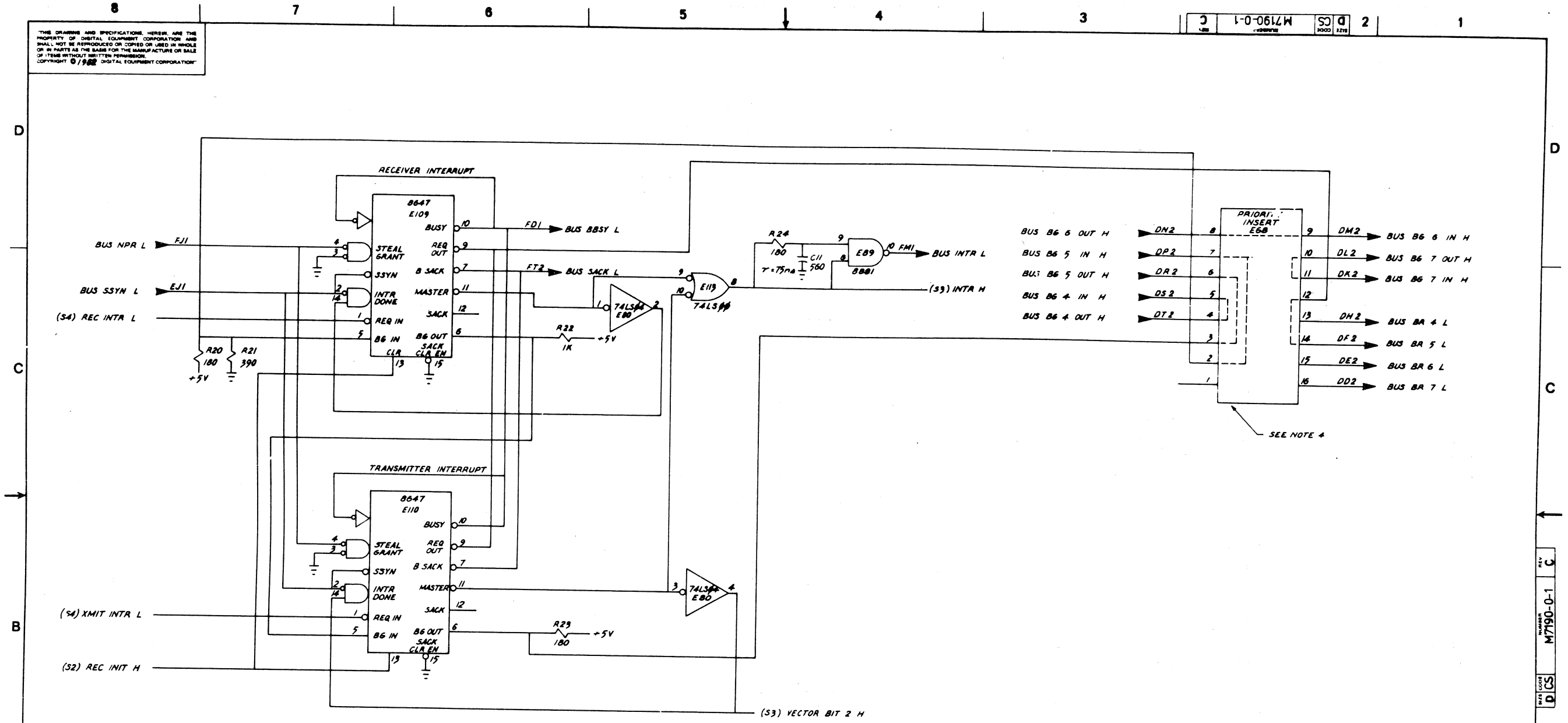

REVISIONS		
CHK	CHANGE NO	REV

(INTERRUPT CONTROL)

TITLE	SIZE	CODE	NUMBER	REV
DZS11-EA STATISTICAL MUX (S3)	D	CS	M7190-0-1	C
SCALE —	SHEET 3 OF 14	DIST		

DEC FORM NO DRD-38

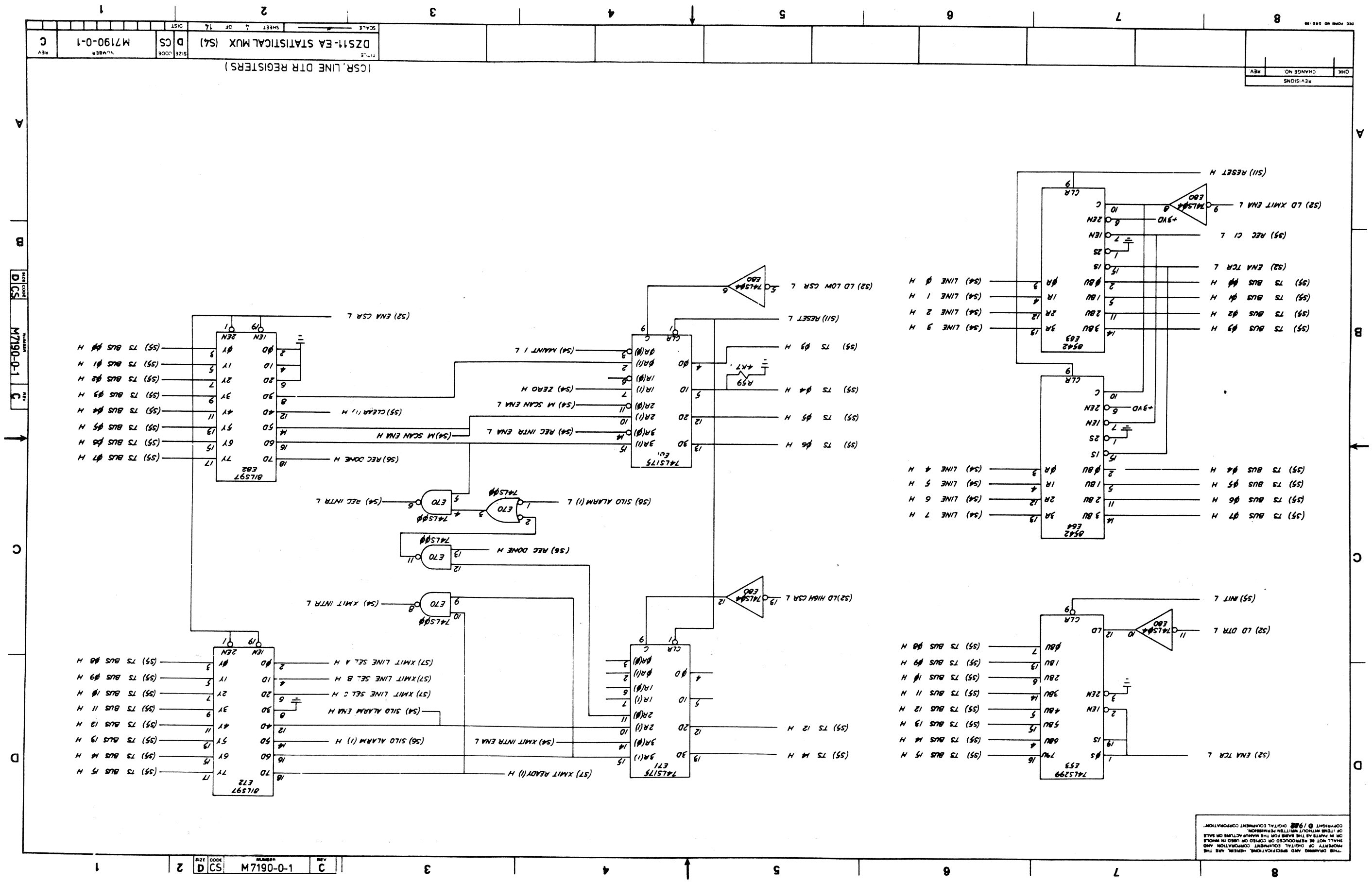
(CSR, LINE DTR REGISTERS)
DZ11-EA STATISTICAL MUX (S4)
M7190-0-1
C
D
CS
74LS175 E71
74LS175 E61
74LS299 E59
8542 E64
8542 E63
8L597 E72
8L597 E62
74LS04 E80
74LS00 E70
R59 4K7
(S2) ENA TCR L
(S2) LO DTR L
(S5) INIT L
(S2) LO XMIT ENA L
(S2) ENA CSR L
(S2) LO LOW CSR L
(S2) LO HIGH CSR L
(S11) RESET H
(S11) RESET L
(S9) REC CI L
(S2) ENA TCR L
(S9) TS BUS Ø7 H
(S9) TS BUS Ø6 H
(S9) TS BUS Ø5 H
(S9) TS BUS Ø4 H
(S4) LINE 7 H
(S4) LINE 6 H
(S4) LINE 5 H
(S4) LINE 4 H
(S4) LINE 9 H
(S4) LINE 2 H
(S4) LINE 1 H
(S4) LINE Ø H
(S9) TS BUS Ø3 H
(S9) TS BUS Ø2 H
(S9) TS BUS Ø1 H
(S9) TS BUS Ø0 H
(S9) TS BUS 15 H
(S9) TS BUS 14 H
(S9) TS BUS 13 H
(S9) TS BUS 12 H
(S9) TS BUS 11 H
(S9) TS BUS 10 H
(S9) TS BUS Ø9 H
(S9) TS BUS Ø8 H
(S9) TS 14 H
(S9) TS 12 H
(S9) TS Ø6 H
(S9) TS Ø5 H
(S9) TS Ø4 H
(S9) TS Ø3 H
(S9) TS Ø1 H
(S4) MAINT 1 L
(S4) ZERO H
(S4) M SCAN ENA L
(S4) REC INTR ENA L
(S4) XMIT INTR ENA L
(S4) SILO ALARM ENA H
(S4) M SCAN ENA H
(S5) CLEAR (1) H
(S6) REC DONE H
(S6) SILO ALARM (1) L
(S4) REC INTR L
(S4) XMIT INTR L
(S7) XMIT READY (1) H
(S7) XMIT LINE SEL A H
(S7) XMIT LINE SEL B H
(S7) XMIT LINE SEL C H
(S6) SILO ALARM (1) H
(S9) TS BUS Ø7 H
(S9) TS BUS Ø6 H
(S9) TS BUS Ø5 H
(S9) TS BUS Ø4 H
(S9) TS BUS Ø3 H
(S9) TS BUS Ø2 H
(S9) TS BUS Ø1 H
(S9) TS BUS Ø0 H
(S9) TS BUS 15 H
(S9) TS BUS 14 H
(S9) TS BUS 13 H
(S9) TS BUS 12 H
(S9) TS BUS 11 H
(S9) TS BUS 10 H
(S9) TS BUS Ø9 H
(S9) TS BUS Ø8 H
THIS DRAWING AND SPECIFICATIONS, HEREIN, ARE THE PROPERTY OF DIGITAL EQUIPMENT CORPORATION AND SHALL NOT BE REPRODUCED OR COPIED OR USED IN WHOLE OR IN PARTS AS THE BASIS FOR THE MANUFACTURE OF ITEMS WITHOUT WRITTEN PERMISSION.
COPYRIGHT © 1980 DIGITAL EQUIPMENT CORPORATION

"THIS DRAWING AND SPECIFICATIONS, HEREIN, ARE THE PROPERTY OF DIGITAL EQUIPMENT CORPORATION AND SHALL NOT BE REPRODUCED OR COPIED OR USED IN WHOLE OR IN PARTS AS THE BASIS FOR THE MANUFACTURE OR SALE OF ITEMS WITHOUT WRITTEN PERMISSION. COPYRIGHT © 1978 DIGITAL EQUIPMENT CORPORATION"

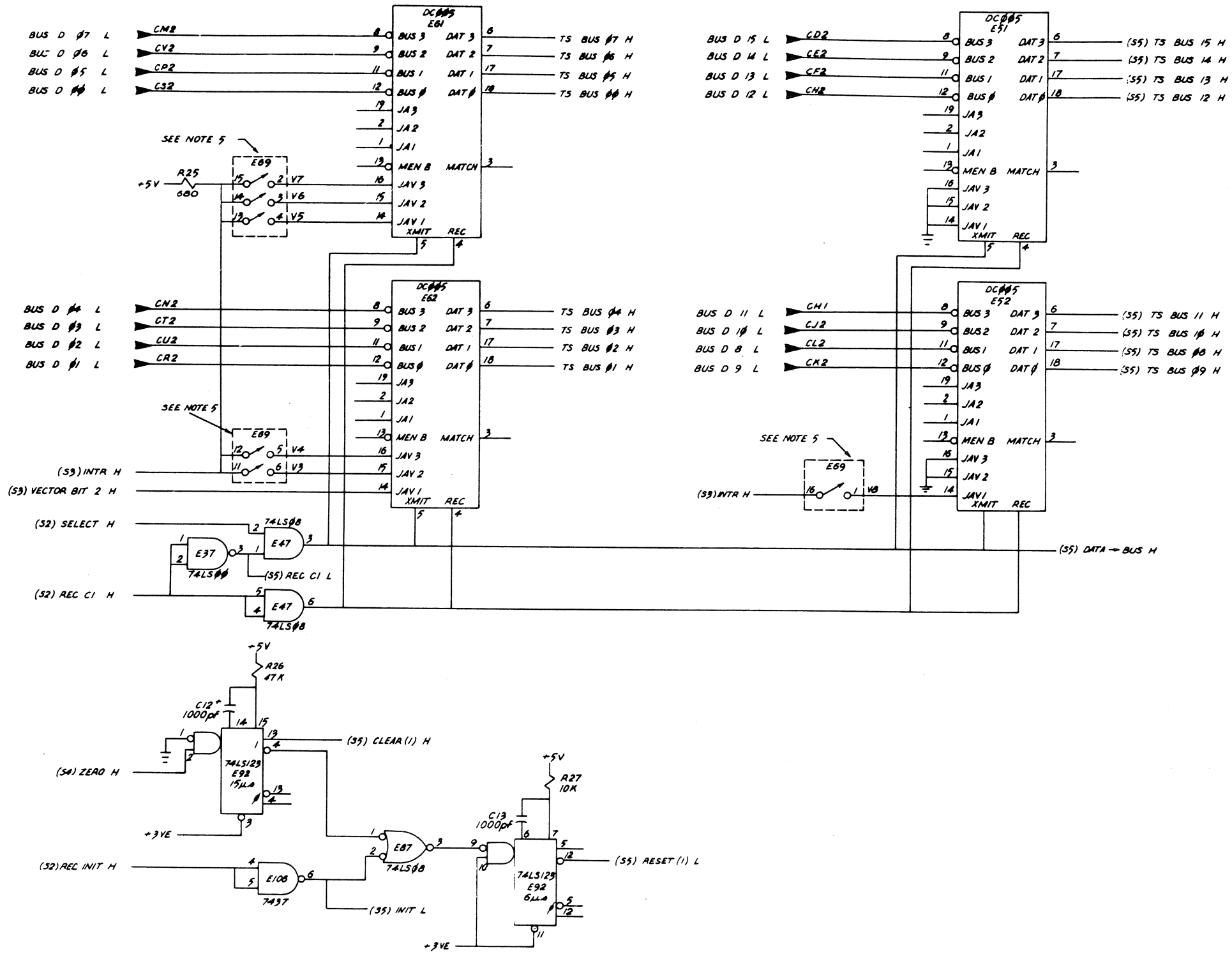

REVISIONS		
CHK	CHANGE NO.	REV

(UNIBUS TRANCEIVERS AND RESET)

TITLE	SIZE	CODE	NUMBER	REV
DZS11-EA STATISTICAL MUX (S5)	D	CS	M7190-0-1	C
SCALE —	SHEET 5 OF 14	DIST.		

DEC FORM NO. DRO 138

THIS DRAWING AND SPECIFICATIONS, HEREIN, ARE THE PROPERTY OF DIGITAL EQUIPMENT CORPORATION AND SHALL NOT BE REPRODUCED OR COPIED OR USED IN WHOLE OR IN PARTS AS THE BASIS FOR THE MANUFACTURE OR SALE OF ITEMS WITHOUT WRITTEN PERMISSION.
COPYRIGHT © 1982 DIGITAL EQUIPMENT CORPORATION

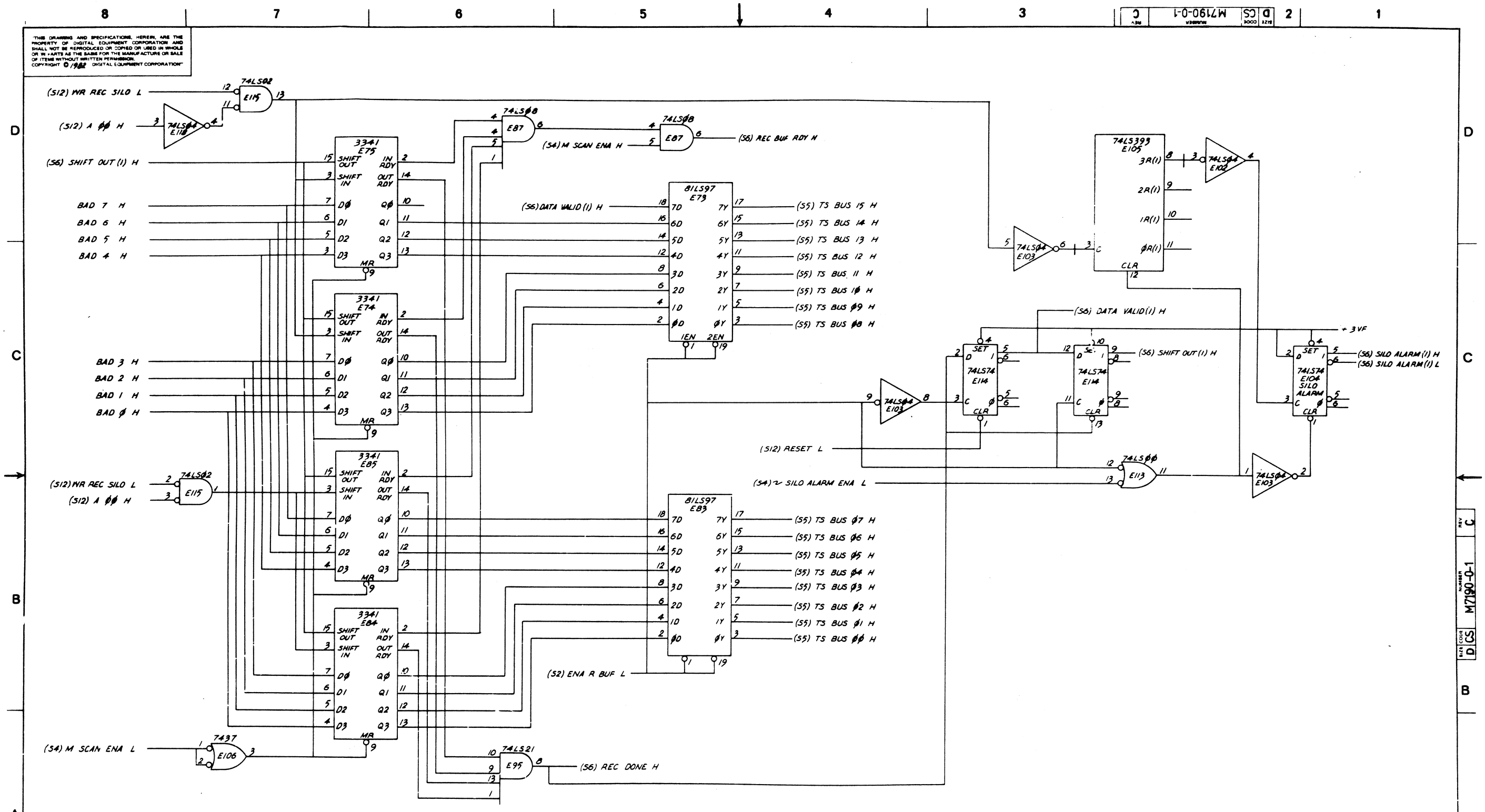

REVISIONS		
HK	CHANGE NO.	REV

(RECEIVE SILO AND CONTROL)

TITLE	SIZE	CODE	NUMBER	REV
DZS11-EA STATISTICAL MUX (S6)	D	CS	M7190-0-1	C
SCALE — SHEET 6 OF 14	DIST			

DEC FORM NO. ORD 128

"THIS DRAWING AND SPECIFICATIONS, HEREIN, ARE THE PROPERTY OF DIGITAL EQUIPMENT CORPORATION AND SHALL NOT BE REPRODUCED OR COPIED OR USED IN WHOLE OR IN PARTS AS THE BASIS FOR THE MANUFACTURE OR SALE OF ITEMS WITHOUT WRITTEN PERMISSION.
COPYRIGHT © 1982 DIGITAL EQUIPMENT CORPORATION"

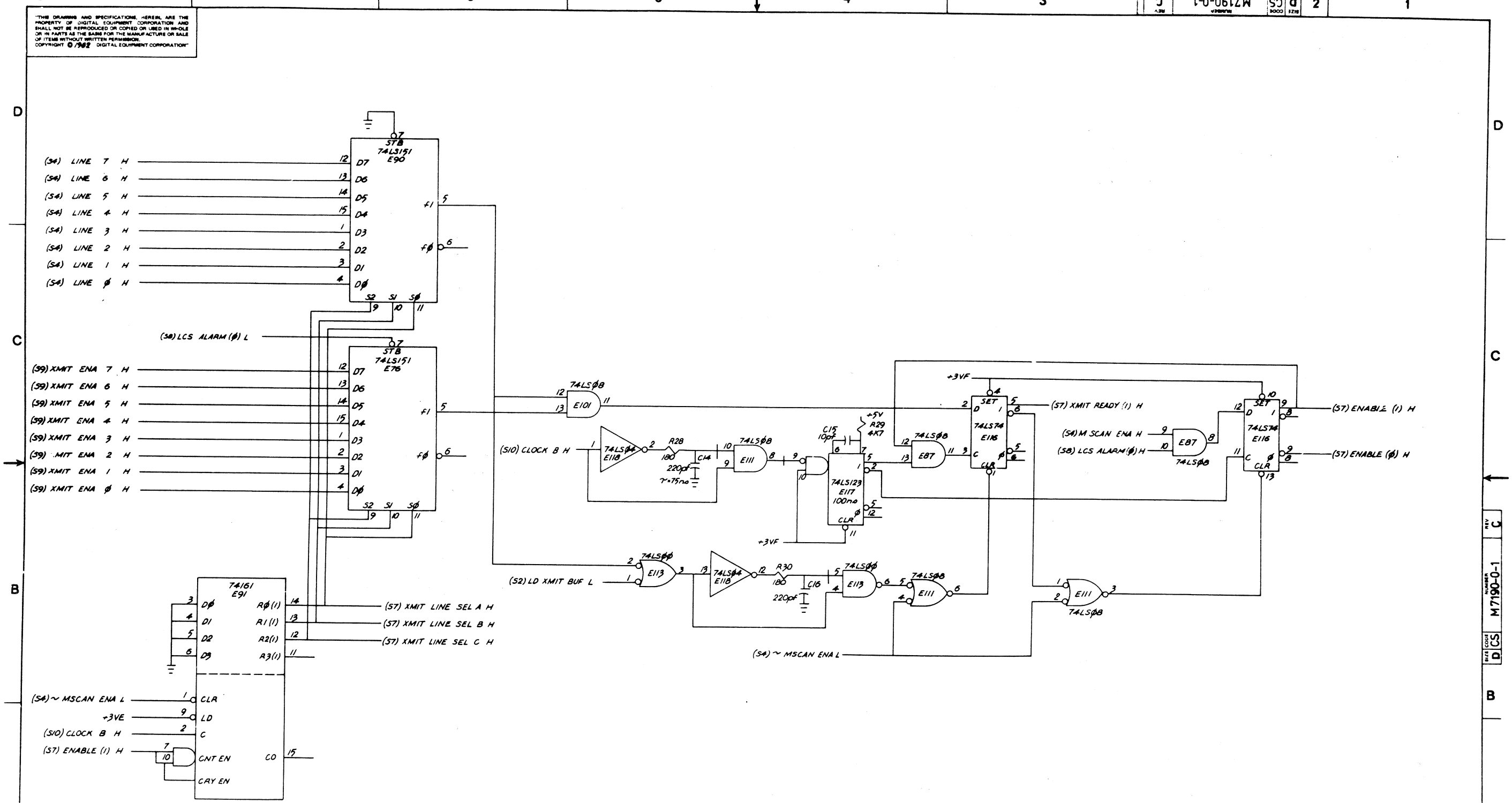

REVISIONS		
CHK	CHANGE NO.	REV

(TRANSMIT CONTROL)

TITLE	SIZE	CODE	NUMBER	REV
DZS11-EA STATISTICAL MUX (S7)	D	CS	M7190-0-1	C
SCALE —	SHEET 7 OF 14	DIST		

DEC FORM NO DRD-30

SIZE D CODE CS NUMBER M7190-0-1 REV C

"THIS DRAWING AND SPECIFICATIONS, HEREIN, ARE THE PROPERTY OF DIGITAL EQUIPMENT CORPORATION AND SHALL NOT BE REPRODUCED OR COPIED OR USED IN WHOLE OR IN PARTS AS THE BASIS FOR THE MANUFACTURE OR SALE OF ITEMS WITHOUT WRITTEN PERMISSION.
COPYRIGHT © 1980 DIGITAL EQUIPMENT CORPORATION"

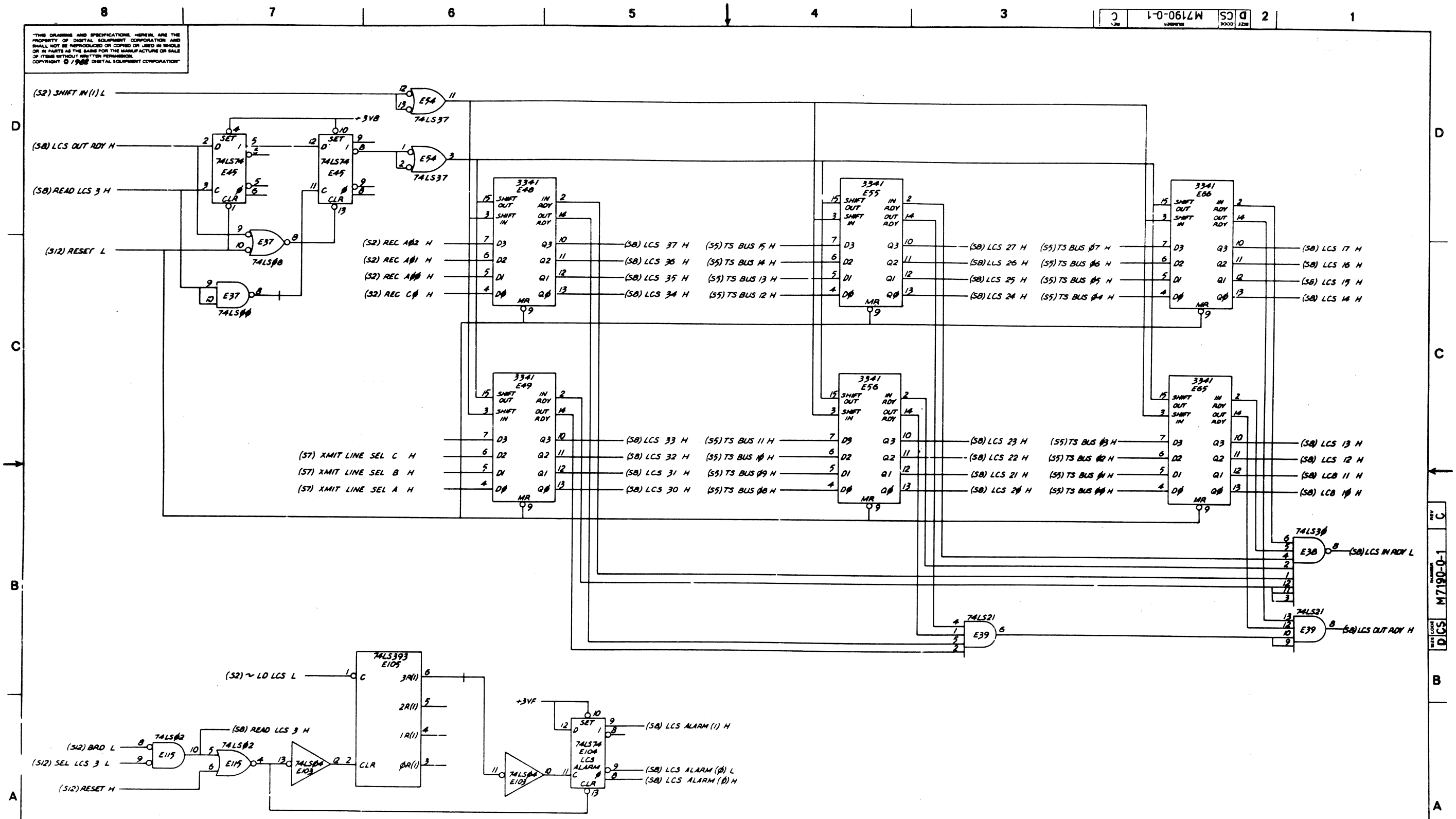

REVISIONS		
CHK	CHANGE NO	REV

(LCS SILO AND CONTROL)

TITLE	SIZE	CODE	NUMBER	REV
DZS11-EA STATISTICAL MUX (S&)	D	CS	M7190-0-1	C
SCALE —	SHEET 8 OF 14	DIST		

"THIS DRAWING AND SPECIFICATIONS, HEREIN, ARE THE PROPERTY OF DIGITAL EQUIPMENT CORPORATION AND SHALL NOT BE REPRODUCED OR COPIED OR USED IN WHOLE OR IN PARTS AS THE BASIS FOR THE MANUFACTURE OR SALE OF ITEMS WITHOUT WRITTEN PERMISSION. COPYRIGHT © 1982 DIGITAL EQUIPMENT CORPORATION"

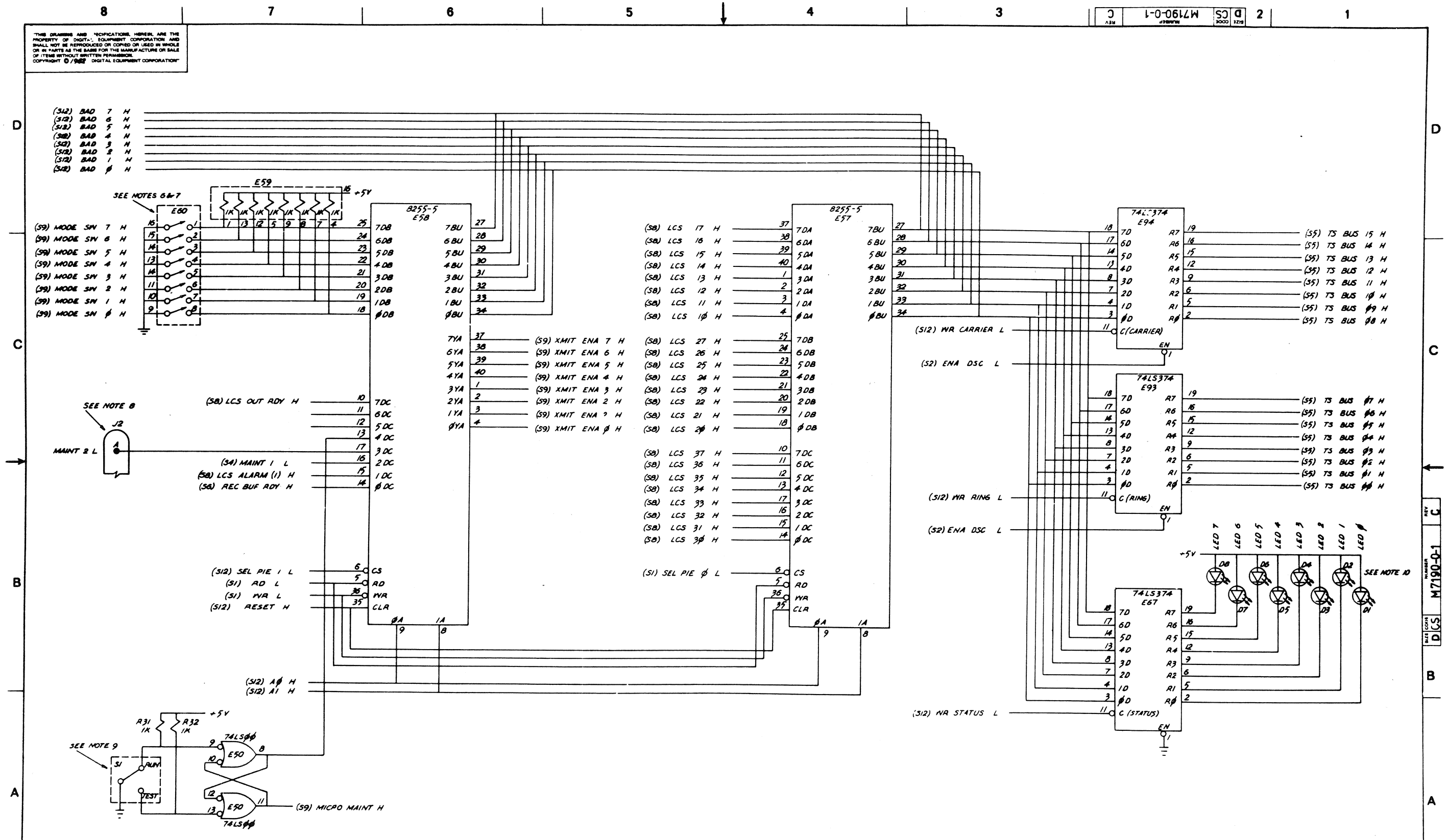

REVISIONS		
CHG.	CHANGE NO.	REV.

(MICRO I/O REGISTERS)

TITLE	SIZE	CODE	NUMBER	REV.
DZS11-EA STATISTICAL MUX (S9)	D	CS	M7190-0-1	C
SCALE — SHEET 9 OF 14	DIST			

REVISIONS		
CHK	CHANGE NO	REV

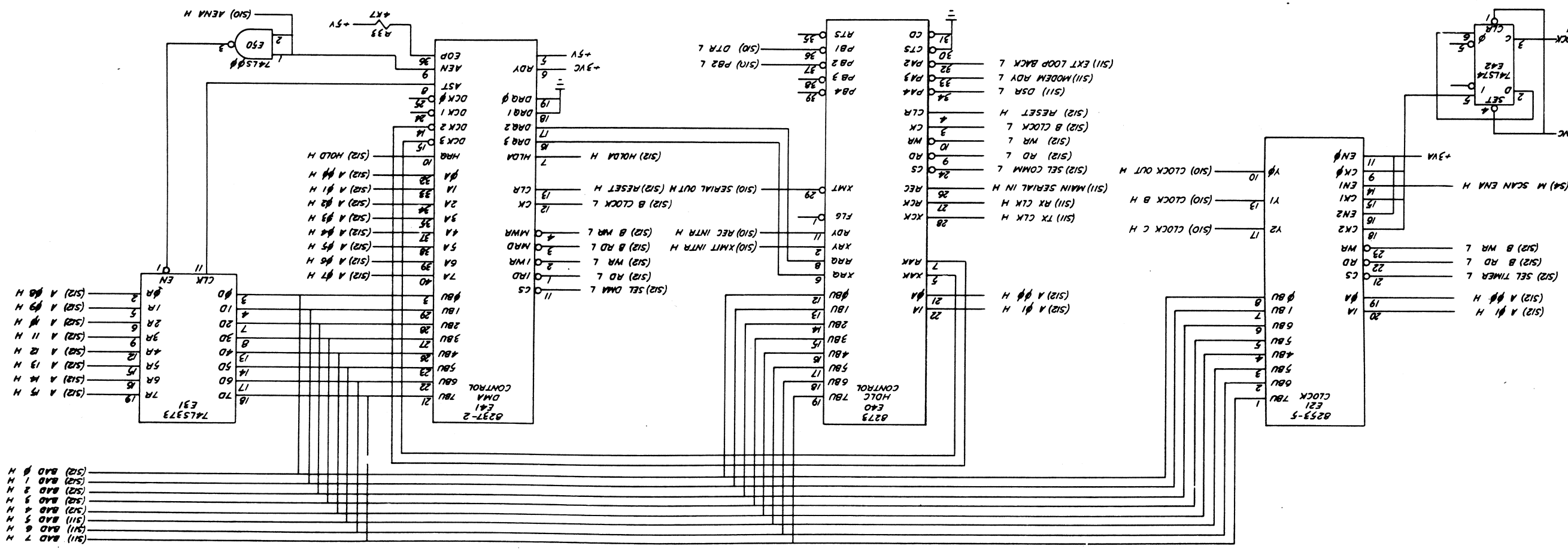

"THIS DRAWING AND SPECIFICATIONS, HEREIN, ARE THE PROPERTY OF DIGITAL EQUIPMENT CORPORATION AND SHALL NOT BE REPRODUCED OR COPIED OR USED IN WHOLE OR IN PARTS AS THE BASIS FOR THE MANUFACTURE OR SALE OF ITEMS WITHOUT WRITTEN PERMISSION. COPYRIGHT © 1982 DIGITAL EQUIPMENT CORPORATION."

SIZE	CODE	NUMBER	REV
D	CS	M7190-0-1	C

DEC FORM NO 2R8-136

SIZE	CODE	TITLE	SCALE	SHEET 10 OF 14	DIST
D	CS	DZS11-EA STATISTICAL MUX (S10)			

SIZE	CODE	NUMBER	REV
D	CS	M7190-0-1	C

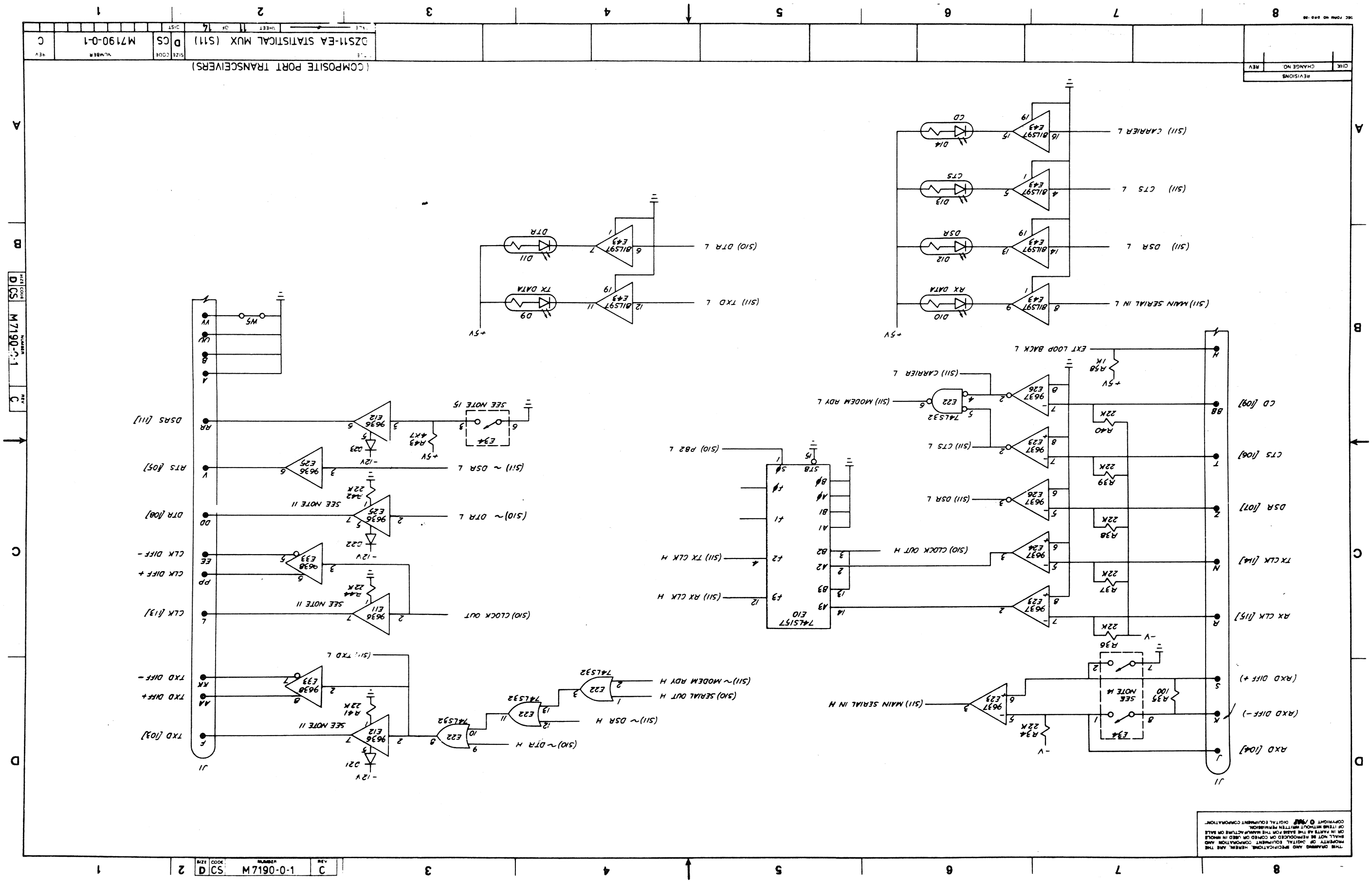
(COMPOSITE PORT TRANSCEIVERS)
DZS11-EA STATISTICAL MUX (S11)
M7190-0-1
REVISIONS
J1
AXD [104]
RXD DIFF -
RXD DIFF +
RX CLK [115]
TX CLK [114]
DSR [107]
CTS [106]
CD [109]
(S11) MAIN SERIAL IN H
(S11) DSR L
(S11) CTS L
(S11) CARRIER L
(S11) MODEM RDY L
EXT LOOP BACK L
(S10) CLOCK OUT H
(S11) RX CLK H
(S11) TX CLK H
(S10) PB2 L
74LS157
E10
74LS32
E22
E23
E24
E26
R34 22K
R35 100
SEE NOTE 4
R36 22K
R37 22K
R38 22K
R39 22K
R40 22K
R58 1K
+5V
-V
TXD [103]
TXD DIFF +
TXD DIFF -
CLK [113]
CLK DIFF +
CLK DIFF -
DTR [108]
RTS [105]
DSRS [111]
(S11) TXD L
(S10) CLOCK OUT
(S11) ~ DSR L
(S10) ~ DTR L
(S10) ~ DTR H
(S11) ~ DSR H
(S10) SERIAL OUT H
(S11) ~ MODEM RDY H
SEE NOTE 11
SEE NOTE 15
R41 22K
R42 22K
R43 4K7
R44 22K
C21
C22
C23
-12V
(S11) TXD L
(S11) DSR L
(S11) CTS L
(S11) CARRIER L
(S11) DTR L
D9
D10
D11
D12
D13
D14
TX DATA
RX DATA
DTR
DSR
CTS
CD
8D1S97
E43
W5
SIZE D
CODE CS
NUMBER M7190-0-1
REV C

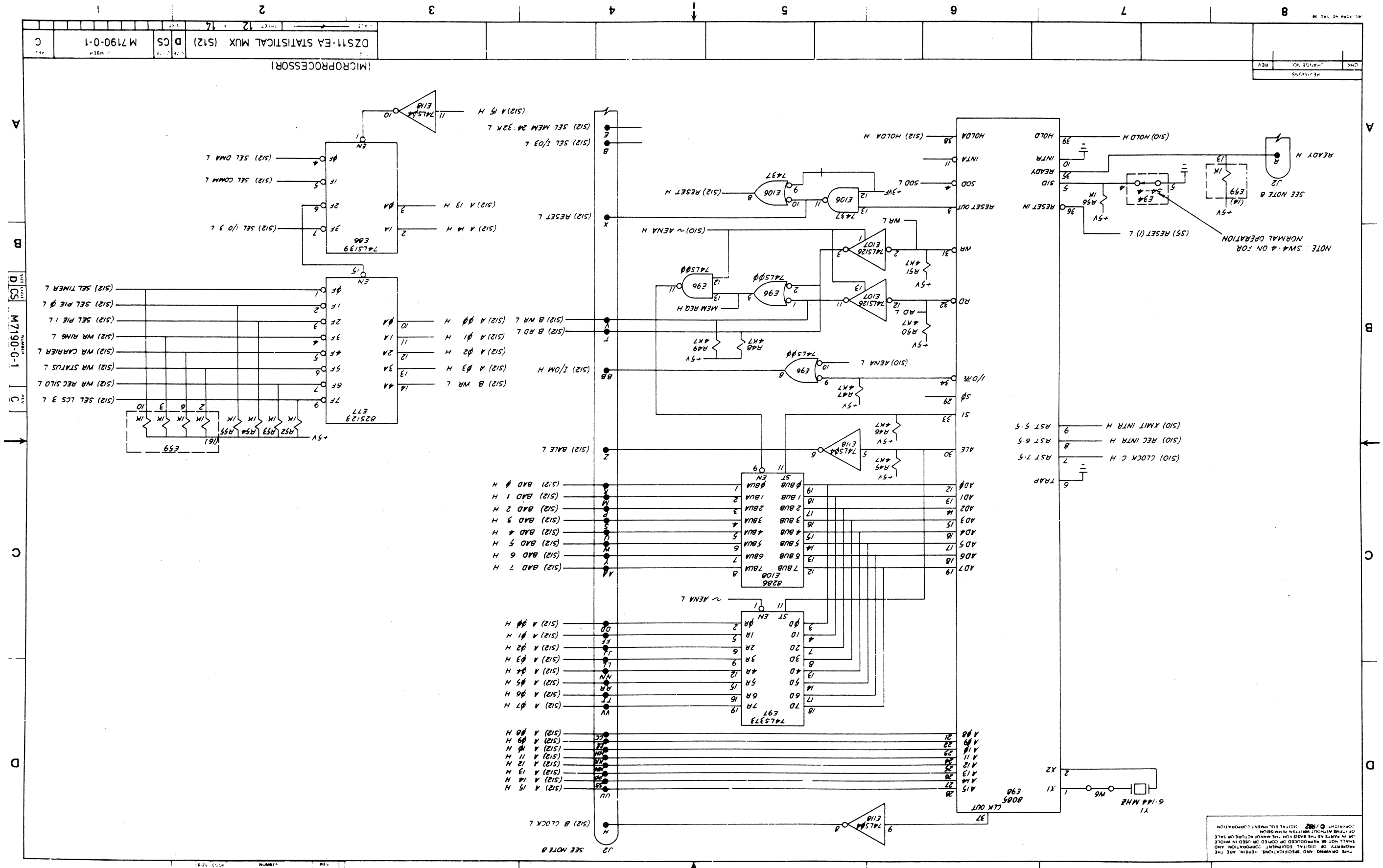

THIS DRAWING AND SPECIFICATIONS HEREIN ARE THE PROPERTY OF DIGITAL EQUIPMENT CORPORATION AND SHALL NOT BE REPRODUCED OR COPIED OR USED IN WHOLE OR IN PARTS AS THE BASIS FOR THE MANUFACTURE OR SALE OF ITEMS WITHOUT WRITTEN PERMISSION

COPYRIGHT © 1982 DIGITAL EQUIPMENT CORPORATION

D CS	M7190-0-1	C	

REVISIONS		
CHK	CHANGE NO	REV

DZS11-EA STATISTICAL MUX (S13) D CS M7190-0-1 C

(MICROPROCESSOR ROM/RAM)

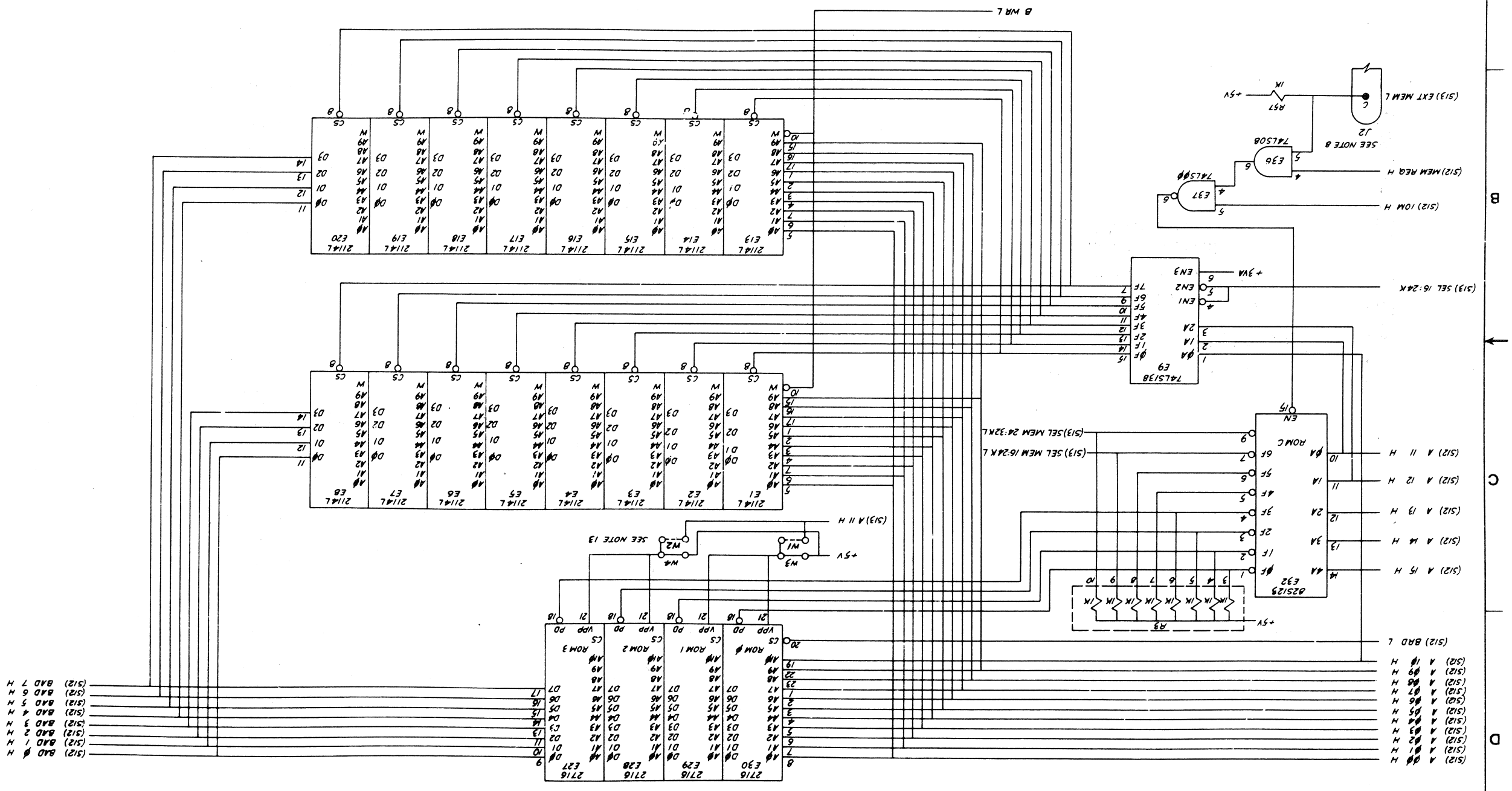

THIS DRAWING AND SPECIFICATIONS, HEREIN, ARE THE PROPERTY OF DIGITAL EQUIPMENT CORPORATION AND SHALL NOT BE REPRODUCED OR COPIED OR USED IN WHOLE OR IN PARTS AS THE BASIS FOR THE MANUF ACTURE OR SALE OF ITEMS WITHOUT WRITTEN PERMISSION
COPYRIGHT © 1982 DIGITAL EQUIPMENT CORPORATION

SIZE	CODE	NUMBER	REV
D	CS	M7190-0-1	C

THIS DRAWING AND SPECIFICATIONS HEREIN ARE THE PROPERTY OF DIGITAL EQUIPMENT CORPORATION AND SHALL NOT BE REPRODUCED OR COPIED OR USED IN WHOLE OR IN PARTS AS THE BASIS FOR THE MANUFACTURE OR SALE OF ITEMS WITHOUT WRITTEN PERMISSION
COPYRIGHT © 1980 DIGITAL EQUIPMENT CORPORATION

1. WHEN A SWITCH IS CLOSED (ON), THE COMPARATOR RECOGNISES THE RESPECTIVE UNIBUS ADDRESS BIT WHEN IT IS A LOGIC ONE (LOW). WHEN A SWITCH IS OPEN (OFF) THE COMPARATOR RECOGNISES THE RESPECTIVE UNIBUS ADDRESS BIT WHEN IT IS A LOGIC ZERO (HIGH).

2. THE "B" AND "D" INPUTS ON THE 8136 LOGIC SYMBOL HAVE THE FOLLOWING MEANING:

   B = UNIBUS RECEIVER INPUT
   D = TTL LOGIC INPUT.

3. THE 8136 CONTAINS SIX VOLTAGE COMPARATORS WITH A COMMON OUTPUT. EACH COMPARATOR MUST HAVE IT'S "B" AND "D" INPUTS THE SAME, AT THE SAME TIME, FOR A TRUE (HIGH) OUTPUT.

4. PRIORITY 5 IS THE STANDARD FOR THIS MODULE, THEREFORE E68 SHOWS THE REQUEST AND GIANT PATHS FOR PRIORITY 5.

5. WHEN THE SWITCH IS CLOSED (ON), THE RESPECTIVE VECTOR BIT IS SET TO A LOGICAL ONE. WHEN A SWITCH IS OPEN (OFF), THE RESPECTIVE VECTOR BIT IS SET TO A LOGICAL ZERO.

6. SWITCH PACK E60 ENABLES SELECTION OF COMPOSITE PORT BAUD RATES, COMPOSITE PORT TIMING SOURCE, AND ENABLES CONTINUOUS OPERATION OF SELECTED OFFLINE MICRODIAGNOSTICS.

COMPOSITE PORT BAUD RATE

BAUD RATE	SW6	SW7	SW8
1200	ON	ON	ON
1800	ON	ON	OFF
2400	ON	OFF	ON
3600	ON	OFF	OFF
4800	OFF	ON	ON
7200	OFF	ON	OFF
9600	OFF	OFF	ON
19200	OFF	OFF	OFF

NOTE:

SW5 = ON (CLOSED) SELECTS EXTERNAL CLOCK
SW5 = OFF (OPEN) SELECTS INTERNAL CLOCK

MICRODIAGNOSTIC CONTROL

TEST	SW2	SW3	SW4
ROM	ON	ON	OFF
RAM	ON	OFF	ON
CLOCK	ON	OFF	OFF
X.25 LOGIC	OFF	ON	ON
X.25 INT DATA	OFF	ON	OFF
DMA LOGIC	OFF	OFF	ON
X.25 EXT DATA	OFF	OFF	OFF

NOTE:

SW1 = OFF (OPEN) FOR LOOP ON SELECT TEST
SW1 = ON (CLOSED) FOR RUN ALL TESTS

7. BAUD RATE SELECT SWITCHES E60-6, E60-7, AND E60-8, MUST BE SET TO OPERATIONAL BAUD RATE FOR BOTH INTERNAL AND EXTERNAL TIMING CLOCK.

8. J2 IS AN OPTION PORT, AND IS RESERVED FOR FUTURE EXPANSION.

9. S1 IS THE RUN/MAINTENANCE SWITCH AND IS USED TO ENABLE OFF LINE MICRODIAGNOSTIC. WHEN IN THE RUN POSITION (RUN LOW) THE MICROCONTROLLER WILL BE IN STATISTICAL MUX MODE. WHEN IN THE TEST POSITION (TEST LOW) THE MICROCONTROLLER WILL BE IN THE DIAGNOSTIC MODE.

10. LEDS 0 THRU 7 DISPLAY BOTH OPERATIONAL AND MAINTENANCE STATUS.
    LEDS 7 THRU 6 DISPLAY THE MODE, I.E. WHEN LEDS 7 THRU 6 ARE FLASHING, LEDS 0 THRU 5 DISPLAY STATISTICAL MUX OPERATIONAL STATUS. WHEN LEDS 7 THRU 6 ARE IN ANY STEADY STATE, LEDS 0 THRU 5 DISPLAY MAINTENANCE STATUS.

11. R35, 41, 42, AND 44 SELECT RS-423, RS-232C SLEW RATE. OPTION IS SHIPPED WITH 22K RESISTOR INSTALLED ENABLING ALL BAUD RATES TO OPERATE OVER 50 FEET.

EIA RS-423/RS-232C SLEW RATE RESISTOR VALUES

BAUD RATE	RESISTOR VALUE
38.4K BAUD	22K OHMS
19.2K BAUD	57K OHMS
9.6K BAUD	120K OHMS
4.8K BAUD	200K OHMS
2.4K BAUD	430K OHMS
1.2K BAUD	820K OHMS

12. W8 SHOULD BE INSTALLED FOR NORMAL OPERATION.

13. W3 AND W4 SHOULD BE INSTALLED. (2716 OPERATION). W1 AND W2 SHOULD NOT BE INSTALLED (2732 OPERATION).

14. TO ENABLE MAIN COMPOSITE PORT FOR EIA RS-423/232C OPERATION, SET E34-1 OFF AND E34-2 ON.
    TO ENABLE MAIN COMPOSITE PORT FOR EIA LONG LINE DRIVE OPERATION SET E34-1 ON AND E34-2 OFF.

15. E34-3 IS THE MODEM BAUD RATE SELECTOR.
    SET E34-3 ON TO ENABLE HIGH BUAD RATE.
    SET E34-3 OFF TO ENABLE LOW BAUD RATE.
    NORMAL OPERATION IS WITH E34-3 ON.

(NOTES)

REVISIONS		
CHK	CHANGE NO	REV

TITLE	SIZE	CODE	NUMBER	REV
DZS11-EA STATISTICAL MUX (S14)	C	CS	M7190-0-1	C

SCALE — SHEET 14 OF 14 DIST

SIZE C CODE CS NUMBER M7190-0-1 REV C

"THIS DRAWING AND SPECIFICATIONS, HEREIN, ARE THE PROPERTY OF DIGITAL EQUIPMENT CORPORATION AND SHALL NOT BE REPRODUCED OR COPIED OR USED IN WHOLE OR IN PART AS THE BASIS FOR THE MANUFACTURE OR SALE OF ITEMS WITHOUT WRITTEN PERMISSION. COPYRIGHT © 1982, DIGITAL EQUIPMENT CORPORATION"

LEGEND

NUMBER	REV	DIM "X"	DIM "Y" (PRECUT)
BCØ5C-1F	–	18 IN ±1 IN	19.8 IN ±1 IN
BCØ5C-2F	–	30 IN ±1 IN	31.8 IN ±1 IN
BCØ5C-Ø5	–	5 FT ±2 IN	5 FT 1.8 IN ±2 IN
BCØ5C-Ø9	–	9 FT ±3 IN	9 FT 1.8 IN ±3 IN
BCØ5C-1Ø	–	10 FT ±3 IN	10 FT 1.8 IN ±3 IN
BCØ5C-25	–	25 FT ±3 IN	25 FT 1.8 IN ±3 IN
BCØ5C-35	–	35 FT ±2%	35 FT 1.8 IN ±2%
BCØ5C-5Ø	–	50 FT ±2%	50 FT 1.8 IN ±2%
BCØ5C-7Ø	–	70 FT ±2%	70 FT 1.8 IN ±2%
BCØ5C-A5	–	150 FT ±2%	150 FT 1.8 IN ±2%
BCØ5C-C5	–	350 FT ±2%	350 FT 1.8 IN ±2%

NOTES:

1. MANUFACTURING SHOULD USE MACHINE CRIMPER TOOL FOR CRIMPING PINS (ITEM #7). MUST BE HT68 FROM BERG ELECT.
2. ONLY DEC P/N 12109 18-15 MAY BE USED AS J1.
3. PLACE ITEM #9 (THIS SIDE UP STICKER) ON LETTERED SIDE OF ITEM #6 (BERG HOUSING) AS SHOWN.
4. DUE TO ± TOLERANCES WITH DIFFERENT VENDORS THE CABLE HOLE DIA. IN HOOD (ITEM 5) MAY VARY, CAUSING POTENTIAL STRAIN RELIEF GRIPPING PROBLEM. SHOULD THIS CONDITION BE PRESENT, USE ITEM #14 (9007834) AT JUNCTION OF CABLE AND HOOD.
5. PLACE ITEM #4 (9107256) OVER SHIELD WIRE J1-A, J1-B, P1-1, P1-7.
6. CABLES THAT EXCEED 50 FT. ARE NOT GUARANTEED BY DIGITAL EQUIP. CORP. TO FUNCTION SATISFACTORILY. CABLES OVER 50 FT. ARE SUPPLIED AT CUSTOMERS OWN RISK.

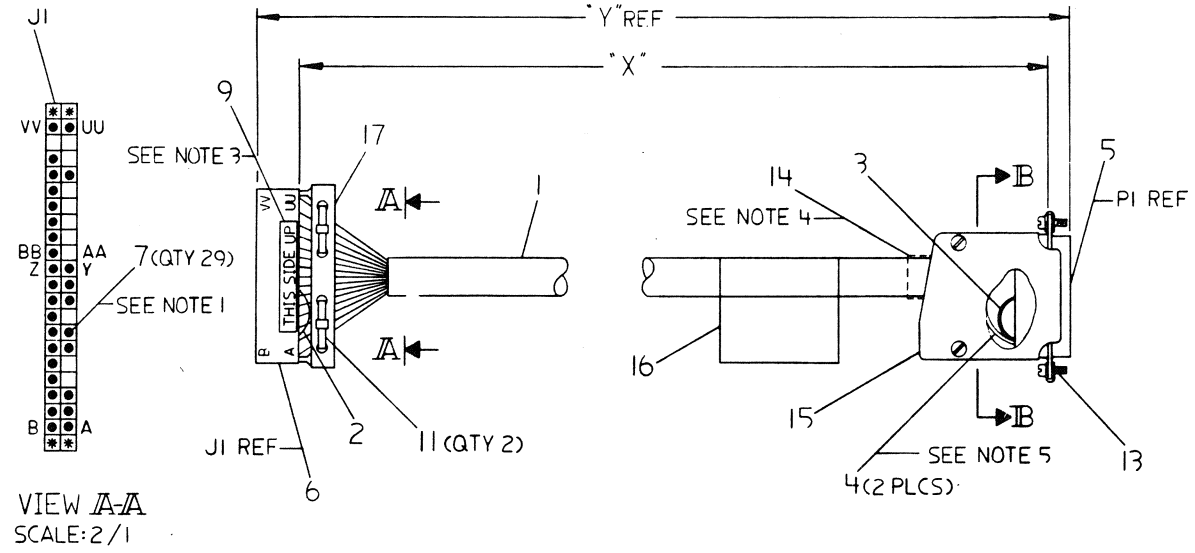

VIEW A-A
SCALE: 2/1

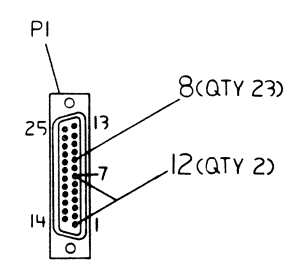

SECTION B-B

CAUTION: OFF SHEET PARTS LIST EXISTS REFER TO K-PL-BCØ5C-Ø-Ø.

REV.	CHANGE NO.	CHK.
L	REVISED AND REDRAWN BCØ5C-MKØ11	

REVISIONS

DESCRIPTION	DWG./PART NO.	ITEM NO.

UNLESS OTHERWISE SPECIFIED DIMENSIONS ARE IN INCHES

ANGLES ±0° 30'	PLACE OF ACCURACY (CHECK ONE)	NOMINAL DIMENSION RANGE INCHES					
SURFACE QUALITY IN MICROINCHES		OVER 0 TO 0.3	OVER 0.3 TO 1.2	OVER 1.2 TO 4.8	OVER 4.8 TO 19.2	OVER 19.2 TO 76.8	OVER 76.8 TO 307.2
	MEDIUM	±.005	±.010	±.012	±.016	±.024	±.031
	PREFERRED	±.012	±.016	±.020	±.031	±.047	±.063

QUANTITY & VARIATION

THIRD ANGLE PROJECTION

REMOVE BURRS AND BREAK SHARP CORNERS

DO NOT SCALE DWG

MATERIAL: SEE PARTS LIST

FINISH: --

DRN. S ROBERTS	3-NOV-71	
CHK'D R COOK	5-NOV-71	
ENG. R M SMITH	5-NOV-71	
PROJ. ENG. R M SMITH	5-NOV-71	
PROD. R GILLSON	8-NOV-71	

NEXT HIGHER ASSY.

SCALE: NONE

SHEET 2 OF 2

FIRST USED ON: DN11

TITLE: CABLE, MODEM BCØ5C

SIZE	CODE	NUMBER	REV.
D	UA	BCØ5C-Ø-Ø	L

DIST.

MK

THIS DRAWING AND SPECIFICATIONS, HEREIN, ARE THE PROPERTY OF DIGITAL EQUIPMENT CORPORATION AND SHALL NOT BE REPRODUCED OR COPIED OR USED IN WHOLE OR IN PART AS THE BASIS FOR THE MANUFACTURE OR SALE OF ITEMS WITHOUT WRITTEN PERMISSION
COPYRIGHT © 1982 DIGITAL EQUIPMENT CORPORATION

WIRE TABLE

ITEM NO.	DESCRIPTION AWG	COLOR	FROM CONN	FROM WITH	TO CONN	TO WITH	REMARKS
1	26	BLU/WHT	P1-1*	12	J1-VV	7	
		WHT/BLU	P1-2	8	J1-F		
		ORN/WHT	P1-3		J1-J		
		WHT/ORN	P1-4		J1-V		
		GRN/WHT	P1-5		J1-T		
		WHT/GRN	P1-6	8	J1-Z		
		BRN/WHT	P1-7**	12	J1-UU		
		WHT/BRN	P1-8	8	J1-BB		
		GRY/WHT	P1-9		J1-Y		
		WHT/GRY	P1-10		J1-W		
		BLU/RED	P1-11		J1-FF		
		RED/BLU	P1-12		J1-JJ		
		ORN/RED	P1-13		J1-D		
		GRY/RED	P1-14		J1-LL		
	26	GRY/GRN	P1-15	8	J1-N	7	

WIRE TABLE CONT.

ITEM NO.	DESCRIPTION AWG	COLOR	FROM CONN	FROM WITH	TO CONN	TO WITH	REMARKS
1	26	RED/BRN	P1-16	8	J1-NN	7	
		GRY	P1-17		J1-R		
		RED/GRY	P1-18		J1-U		
		BLU/BLK	P1-19		J1-P		
		BLK/BLU	P1-20		J1-DD		
		ORN/BLK	P1-21		J1-MM		
		BLK/ORN	P1-22		J1-X		
		GRN/BLK	P1-23		J1-RR		
		BRN/RED	P1-24		J1-L		
		RED/ORN	P1-25	8	J1-C		
		SHIELD	P1-1*	12	J1-A		
		SHIELD	P1-7**	12	J1-B	7	
3		BLK	P1-1*	12	P1-7**	12	
2	26	RED	J1-E	7	J1-M	7	

* DENOTES THREE WIRES ARE SOLDERED INTO THE P1-1 SOLDER CUP.
** DENOTES THREE WIRES ARE SOLDERED INTO THE P1-7 SOLDER CUP.

REVISION HISTORY

DATE	ECO NUMBER	REV

TITLE: CABLE ASSEM BGE56

DOCUMENT NUMBER: SIZE D CODE 1A NUMBER BC05C-0-0 REV L

SCALE NONE SHEET 2 OF 2

NK

SIDE 1

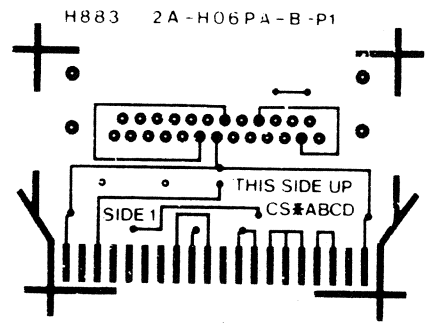

SIDE 2

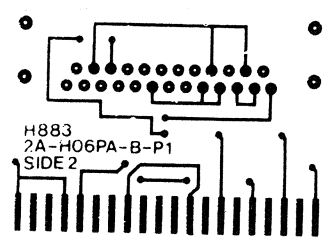

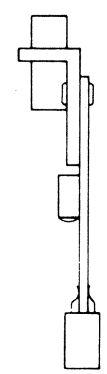

VIEW A

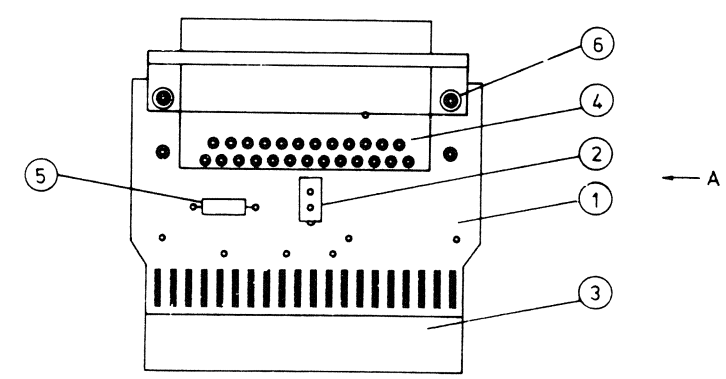

digital EQUIPMENT AUSTRALIA PTY LTD

H883
TEST CONNECTOR

B-DO-/AC06LB-C-0
1/2
D UA
H883-0-0
D

"THIS DRAWING AND SPECIFICATIONS, HEREIN, ARE THE PROPERTY OF DIGITAL EQUIPMENT CORPORATION AND SHALL NOT BE REPRODUCED OR COPIED OR USED IN WHOLE OR IN PARTS AS THE BASIS FOR THE MANUFACTURE OR SALE OF ITEMS WITHOUT WRITTEN PERMISSION
COPYRIGHT © 1982 DIGITAL EQUIPMENT CORPORATION"

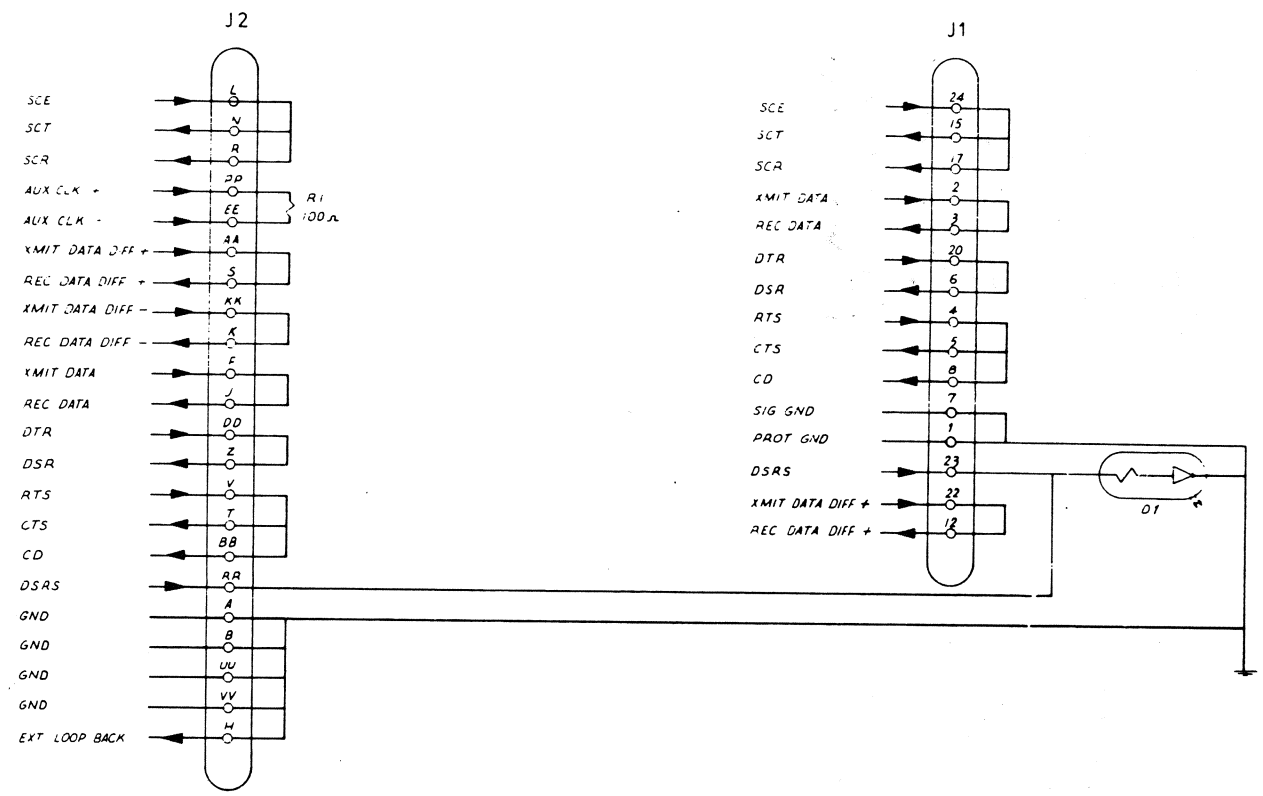

QTY	DESCRIPTION	PART NO	ITEM NO.
2	EYELET ROLLED FLANGE 121	90-06746-00	6
1	100-0 25 W 5% FUSE	13-10881-03	5
1	CONN. D SUB 25 PIN	12-15599-00	4
1	EDGE CARD PLUG. 40 PIN	12-11620-00	3
1	LED 6.5 MA 5V	11-14136-01	2
1	ETCHED CIRCUIT BOARD	2A-H06PA-00	1

PARTS LIST

DRN	DATE FEB 82	digital EQUIPMENT AUSTRALIA PTY LTD.
CHK D	DATE	
ENG	DATE	
PROJ ENG	DATE 1 FEB 82	H883 TEST CONNECTOR
PROD	DATE 1 FEB 82	
NEXT HIGHER ASSY		
D-UA-H883-0-0	SIZE D / CODE CS	NUMBER H883-0-1 / REV 0
SCALE —		
SHEET 1 OF 1	DIST	

REVISIONS		
CHK	CHANGE NO	REV
	INITIAL	C

FAX	CODE	NUMBER	REV
D	CS		

DEC FORM NO DRD 102AR

29-SEP-82 09:43 P A R T S L I S T

LINE	ITEM	DOCUMENT NUMBER	PART NUMBER	DESCRIPTION	QTY PER VARIATION EA	REFERENCE DESIGNATOR
1	1	BX-Q3133-TK-001	BXQ3133-TK	DOCUMENTATION PACK DZS11-EA	1	
2	2		M7190	CONTROL MODULE DXS11-EA	1	
3	3		BC05C-25	CABLE MODEM	1	
4	4		H883	TEST CONNECTOR	1	
5						
6						
7						
8						
9						
10						
11						
12						
13						
14						
15						
16						
17						
18						
19						
20						
21						
22						
23						
24						
25						
26						
27						
28						
29						
30						

REVISION HISTORY			BASIC PART NO: DZS11-EA										
ENG	ECO HISTORY	REV	SECTION A OF A	DRN: C. ROLINSON	DATE: 10-JUN-82	D	I	G	I	T	A	L	
	INITIAL	C	SECTION VARIATION INDEX [A] EA [B] [C] [D] [E] [F] [H] [J] [K] [L] [M] [N]	CHK'D: D. KNOX	DATE: 10-JUN-82	TITLE PARTS LIST DZS11-EA SHIPPING LIST							
				DES ENG: R. STARKEY	DATE: 10-JUN-82								
				RESP ENG: R. STARKEY	DATE: 10-JUN-82	DOCUMENT NUMBER							
				MFG ENG: A. WILLIAMS	DATE: 10-JUN-82	SIZE: K	CODE: PL	NUMBER: DZS11-EA				REV: C	
				ASSEMBLY NUMBER DZS11-EA	TOP DOCUMENT NUMBER B-TC-DZS11-EA	FILE NAME: KPLDZS11-EA						EDIT #: 3	

"THIS DRAWING AND SPECIFICATIONS HEREIN, ARE THE PROPERTY OF DIGITAL EQUIPMENT CORPORATION AND SHALL NOT BE REPRODUCED OR COPIED OR USED IN WHOLE OR PART AS THE BASIS FOR THE MANUFACTURE OR SALE OF ITEMS WITHOUT WRITTEN PERMISSION
COPYRIGHT (C) 1982 DIGITAL EQUIPMENT CORPORATION"