PR501 Paper Tape Reader

Maintenance Manual

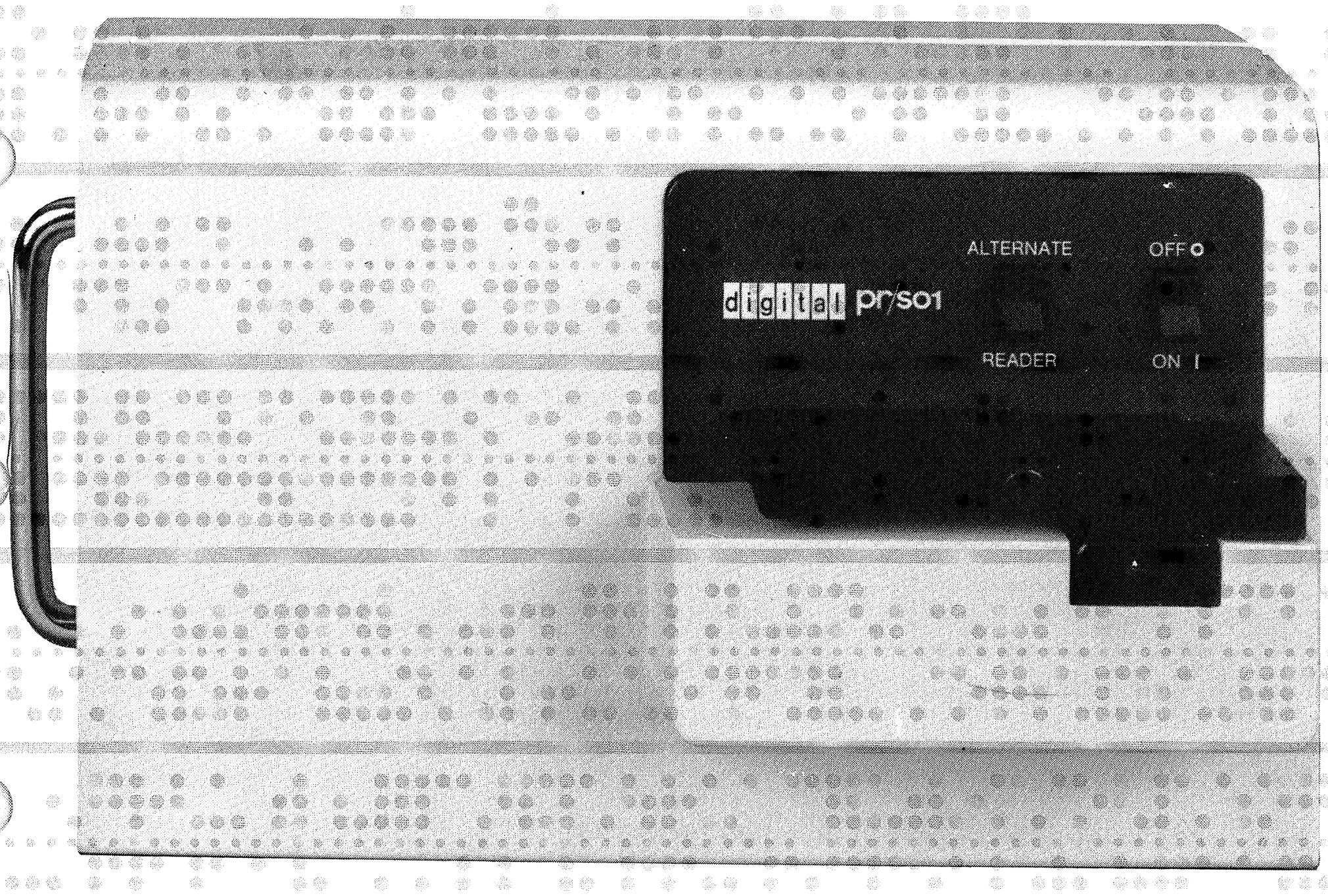

digital

EK-PRS01-MM-002

PRS01 Paper Tape Reader Maintenance Manual

ECO STATUS

UNIT PRS01 S/N A00609 DATE 5/25/79

SUB UNIT	SERIAL NO	C S REV	ETCH
54-12120-0		D	C

digital equipment corporation • maynard, massachusetts

1st Edition, May 1977
2nd Edition, April 1978

Copyright © 1977, 1978 by Digital Equipment Corporation

The material in this manual is for informational purposes and is subject to change without notice.

Digital Equipment Corporation assumes no responsibility for any errors which may appear in this manual.

Printed in U.S.A.

This document was set on DIGITAL'S DECset-8000 computerized typesetting system.

The following are trademarks of Digital Equipment Corporation, Maynard, Massachusetts:

DEC	DECtape	PDP
DECCOMM	DECUS	RSTS
DECsystem-10	DIGITAL	TYPESET-8
DECSYSTEM-20	MASSBUS	TYPESET-11
		UNIBUS

CONTENTS

Page

CHAPTER 1 INTRODUCTION

1.1 DESCRIPTION 1-1
1.2 SCOPE 1-2
1.3 SHIPPING LIST 1-2
1.4 SPECIFICATIONS 1-2
1.5 MAINTENANCE 1-4

CHAPTER 2 REPACKING

2.1 INTRODUCTION 2-1
2.2 REPACKING 2-1

CHAPTER 3 OPERATION

3.1 SCOPE 3-1
3.2 NORMAL OPERATION 3-1
3.3 LOADING PAPER TAPE 3-2

CHAPTER 4 INSTALLATION

4.1 INTRODUCTION 4-1
4.2 CABLING INFORMATION 4-1
4.3 INSTALLATION 4-4
4.4 CHECKOUT PROCEDURE 4-4

CHAPTER 5 TROUBLESHOOTING AND REPAIR

5.1 INTRODUCTION 5-1
5.2 IDENTIFYING PROBLEMS 5-1
5.2.1 Diagnostic Program for PDP-8 5-2
5.2.2 Diagnostic Program for PDP-11 5-2
5.2.3 Stand-Alone System 5-5
5.3 EXTERNAL TROUBLESHOOTING 5-8
5.3.1 Basic Volt/Ohmmeter Checks 5-8
5.3.2 20 mA Circuit Tests 5-10
5.3.3 Reader Circuit Tests 5-11
5.4 INTERNAL TROUBLESHOOTING 5-12
5.4.1 Tape Path Problems 5-13

CONTENTS (CONT)

		Page
5.4.2	Motor	5-14
5.4.3	Transformer	5-14
5.4.4	Head	5-14
5.4.5	Logic Module	5-15

APPENDIX A JUMPER/SWITCH CONFIGURATIONS

FIGURES

Figure No.	Title	Page
1-1	PRS01 Paper Tape Reader	1-1
2-1	Repacking PRS01 Reader	2-2
3-1	Loading Paper Tape	3-3
4-1	Reader Interconnecting Cables	4-2
4-2	PRS01 Schematic Diagram	4-3
5-1	Loop-Back Plug (rear view)	5-6
5-2	Connecting Loop-Back Plug	5-6
5-3	Bit Pattern – All 0s	5-12
5-4	Bit Pattern – All 1s	5-12
5-5	Location of Front Panel Components	5-13
5-6	Head Signals	5-15
5-7	Timing Diagram	5-15
A-1	DL11-A – Module M7800	A-2
A-2	DLV11 – Module M7940	A-3
A-3	KL8J – Module M8655	A-4
A-4	DL11W Module M7856	A-5

TABLES

Table No.	Title	Page
1-1	PRS01 Specifications	1-3
3-1	Reader Controls	3-1
3-2	Switch Combinations	3-2
5-1	Diagnostic Program for PDP-8	5-3
5-2	Diagnostic Program for PDP-11	5-4
5-3	Character Code Definitions	5-7
5-4	Volt/Ohmmeter Checks	5-9

CHAPTER 1
INTRODUCTION

1.1 DESCRIPTION

The PRS01 is a small, portable paper tape reader (Figure 1-1) that connects into the serial line of a system console or terminal. The reader provides a convenient and inexpensive method of loading paper tapes using the keyboard device codes of the terminal. It is designed primarily for loading maintenance and diagnostic programs. Because the reader produces a 20 mA serial asynchronous signal, it can be interconnected to a console device or terminal, or to any 20 mA current loop input if no console device is available.

8473-1

Figure 1-1 PRS01 Paper Tape Reader

A switch on the reader permits selection of either the console keyboard or the PRS01 as the computer input device. This lets the user switch back and forth between devices without having to disconnect the reader once it is installed. Operation of the reader is continuous with start and stop of paper movement manually controlled by a front panel switch. Outside of this, the reader is similar in operation to the low-speed reader on an ASR teleprinter.

The PRS01 reads 8-level tapes with in-line feed hole. Two versions of the reader are available with transmission rates of either 300 baud or 2400 baud.

The entire reader, including a self-contained power supply, is housed in a small 2-piece plastic case. The back cover is removable for easy access to all subassemblies that are mounted inside the front cover.

1.2 SCOPE

This manual provides the user with the information necessary to install, operate, and troubleshoot the PRS01 paper tape reader. The section on installation includes complete cabling and wiring information so that the reader can be connected to a computer system with or without a terminal.

1.3 SHIPPING LIST

A number of items are shipped with each reader. Make certain that the following items have been received.

- PRS01 Paper Tape Reader
- *PRS01 Maintenance Manual* (EK-PRS01-MM-001)
- PRS01 Test Tape (MD-11-DZPRB-A-PT). This is a punched paper tape.
- PRS01 Jumper Plug Parts (70-13435-0-0). These parts can be made into a plug or can be used on the interface connector.

1.4 SPECIFICATIONS

Operating and physical specifications for the PRS01 reader are listed in Table 1-1. Complete cabling and interface information is given in the section on installation (Chapter 4).

Note that the PRS01 operates at either 300 or 2400 baud, depending on the model. The prime differences between models operating at different baud rates are in the drive motor gearing and the location of jumpers on the logic module.

Table 1-1 PRS01 Specifications

Power Requirements	
PRS01-AA, PRS01-BA	1.0 A @ 117 Vac (±10%), 50/60 Hz
PRS01-AB, PRS01-BB	0.5 A @ 230 Vac (±10%), 50 Hz
Operating Temperature	15° C to 32° C (59° F to 90° F)
Humidity	20% to 80% (non-condensing)
Dimensions	30.48 cm wide by 19.05 cm high by 13.33 cm deep (12 in wide by 7-1/2 in high by 5-1/4 in deep)
Weight	2.9 kg (6-1/2 lb) Shipping weight is approximately 3.6 kg (8 lb)
Feed Hole	In-line
Tape	8-level (≤15% transmissivity)
Transmission Rates	
PRS01-AA, PRS01-AB	2400 baud (approximately 120 char/sec)
PRS01-BA, PRS01-BB	300 baud (approximately 22 char/sec)
Interface	20 mA current loop, passive, with Mate-N-Lok connector (12-09378-01)
Data	Data is in the form of a serial pulse string. Each character time consists of one "start" bit, eight "data" bits, and one "stop" bit. The high state in the diagram below is the quiescent state. It is called the "mark" state. It is 20 mA of current flow. It represents a logic ONE. The low state in the diagram below is the "space" state, no current flow, and a logic ZERO. The "start" bit is always a "space", the "stop" bit is always a "mark". The data bits in between can be either. The first bit following the "start" bit is the "least significant bit" or 2^0.

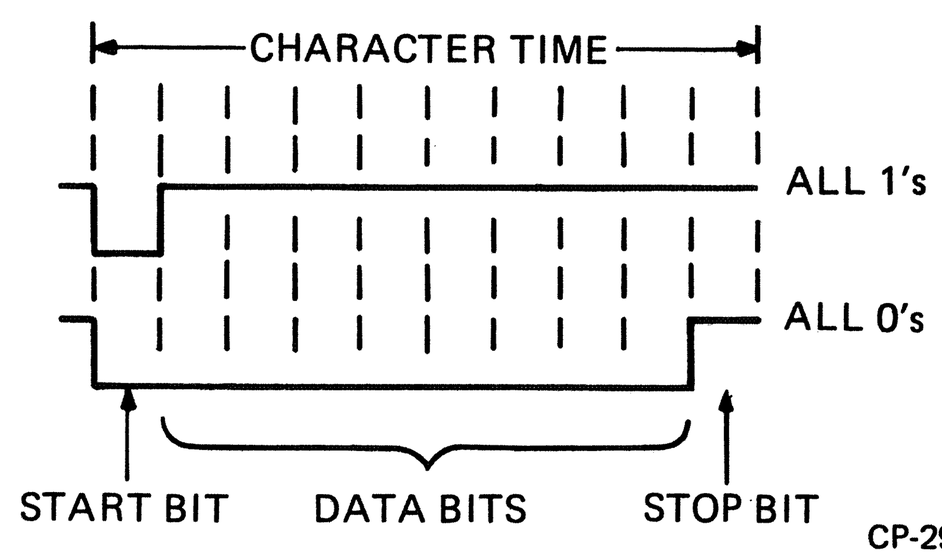

Standard Interface Cable (part of PRS01)	"Y" cable, 3 m (10 ft) long, male and female Mate-N-Lok connectors
Optional Interface Cable	Female Mate-N-Lok to Berg (BC05M-1F)

1.5 MAINTENANCE

The basic maintenance philosophy of the PRS01 reader is to "return to the nearest authorized product repair center" in the event of a malfunction. Chapter 2 of this manual includes instructions for repacking the reader in its original container so that the reader can be sent by mail or a preferred carrier to the nearest DEC repair center. Either the local DEC field office or sales office should be contacted to find out the address of the nearest product repair center.

If downtime might prove to be a problem, it is recommended that the user purchase a second reader for backup purposes.

Although on-site troubleshooting and repair are not recommended, some users may prefer to perform their own maintenance. Therefore, this manual contains a chapter on troubleshooting and repair procedures (Chapter 5). In addition, print sets and spare parts kits may be purchased separately by the user, if desired. The print set order number is: PRS01 Field Maintenance Print Set, No. MP00232

CHAPTER 2
REPACKING

2.1 INTRODUCTION

The basic maintenance philosophy of the PRS01 reader is to "return to the nearest authorized product repair center" in the event of malfunction. Therefore, it is necessary to save the carton and packing material that was used to ship the reader.

2.2 REPACKING

When repacking the reader for shipment to a repair center, use the procedure given below.

1. Make sure that you have the following items (Figure 2-1):

   - Carton
   - Scored sheet
   - Die-cut sheet
   - Two foam end caps.

2. Place the die-cut sheet over the top of the reader so the tape guide cannot swing freely (Figure 2-1).

3. Place a foam end cap over each end of the reader, pulling the power cord through the end cap as shown in the figure.

4. Place the reader in the carton.

5. Place the scored sheet on top of the reader and lay the power cord on top of the sheet.

6. Close the carton and seal with heavy tape.

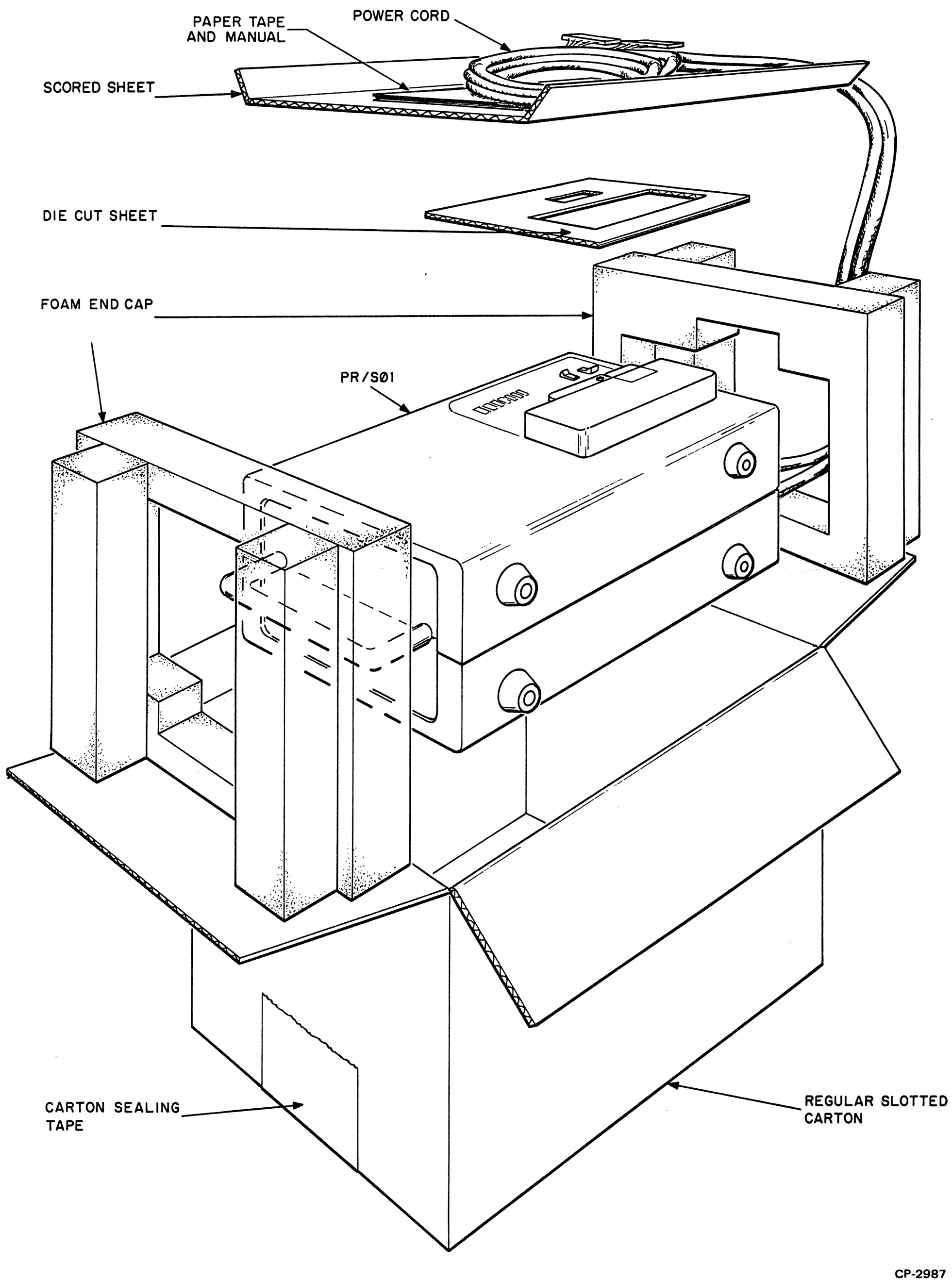

Figure 2-1 Repacking PRSO1 Reader

CHAPTER 3
OPERATION

3.1 SCOPE

This chapter describes operation of the PRS01 reader and is divided into two parts: normal operation and paper tape loading procedures.

3.2 NORMAL OPERATION

The PRS01 has only two controls. These controls are listed in Table 3-1 below.

Table 3-1 Reader Controls

Control	Type	Function
Power ON/OFF switch	2-position toggle	Supplies power to the unit
ALTERNATE/READER switch	2-position toggle	Permits selection of either the PRS01 reader (READER position) or the computer terminal (ALTERNATE position) as the computer input device

These two switches, combined with the reader logic, provide parallel 20 mA current paths for the reader and the computer terminal. This feature eliminates transient signals that otherwise might occur when switching between the two devices.

Reading paper tape is controlled completely by the front panel switches. Unlike other readers, the PRS01 cannot be started or stopped on individual characters. When the ALTERNATE/READER switch is in the READER position, the tape will be read as long as the power ON/OFF switch is ON. Turning the switch OFF stops all tape movement.

Normally, the reader is connected to both the console device (host) and a terminal. The terminal, which is typically a keyboard/printer, usually has both a transmitter (TRAN) and receiver (REC) section. Thus, the terminal can send signals to the computer (TRAN section) and receive signals from the computer (REC section).

The PRS01 reader is disabled when its power switch is OFF and its ALTERNATE/READER switch is set to ALTERNATE. In this case, the computer system functions as if the reader were not connected. When the ALERNATE/READER switch is set to READER, the reader is connected in parallel with the keyboard. This parallel connection eliminates transients when switching from one device to another.

The reader is activated by turning the power ON/OFF switch ON. One of the legs of the switch disconnects the transmitter portion of the keyboard. The other legs apply ac power to the motor that moves the tape through the reader. Using this power ON/OFF switch is the only way of starting and stopping the tape. As the tape is read, the reader logic sends the translated signals to the computer through the ALTERNATE/READER switch. Because the receiver portion of the terminal is *not* disconnected, the terminal can be used for normal printing.

The four possible combinations of switch positions and the associated function of each combination are listed in Table 3-2.

Table 3-2 Switch Combinations

Power ON/OFF Switch	ALTERNATE/READER Switch	Function
OFF	ALTERNATE	Reader disabled. Computer system functions as if reader were not connected.
OFF	READER	Reader connected in parallel with keyboard to eliminate transients when switching between devices. Reader is inactive. Keyboard is inoperative.
ON	READER	Reader starts reading tape. Continues reading tape until power ON/OFF switch is turned OFF. Terminal can be used for normal printing. Keyboard is inoperative.
ON	ALTERNATE	Illegal combination. Tape will move through reader but cannot be read as reader logic circuits are disabled. Keyboard is inoperative.

3.3 LOADING PAPER TAPE

Although loading paper tape into the PRS01 reader is a relatively simple procedure, the steps shown in Figure 3-1 should be followed carefully to ensure proper loading and to prevent damage to the paper tape.

8473-4

A. Insert edge of paper at a slight angle between read head station and tape guide as shown at left. The beginning of the tape leader should be at the left side of the reader. The edge of the tape that has three channels of data should be closest to the reader. Note that any data to the left of the read head will not be read because tape movement is right to left. Once the tape is between the read head and tape guide, straighten tape and push it toward the back of the read station.

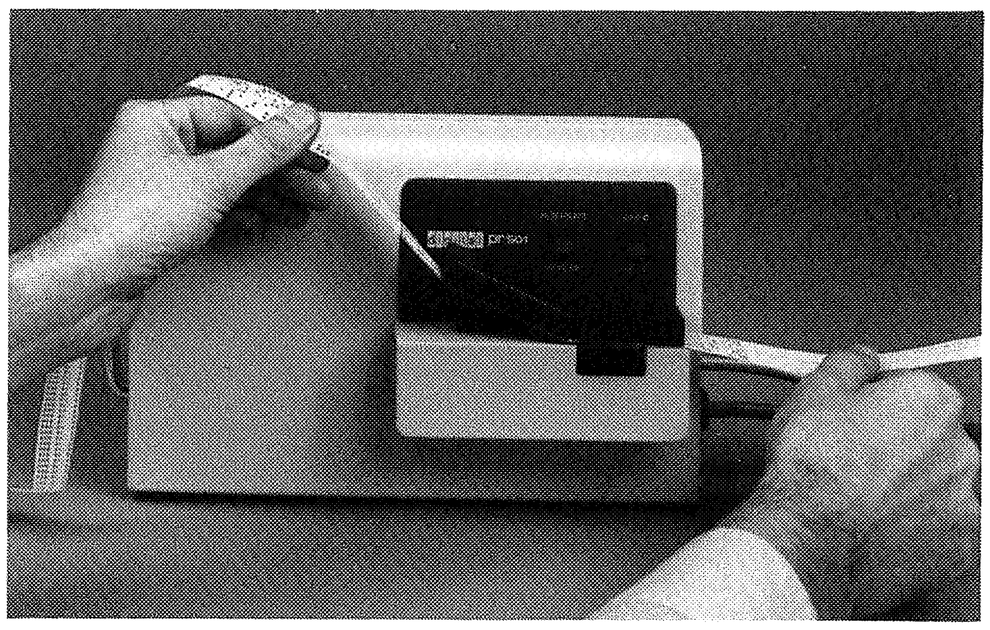

8473-2

B. With left hand, lift left side of tape to lift up tape guide as shown at left. Slide tape all the way into the read station and then let it down so the tape guide returns to its original position.

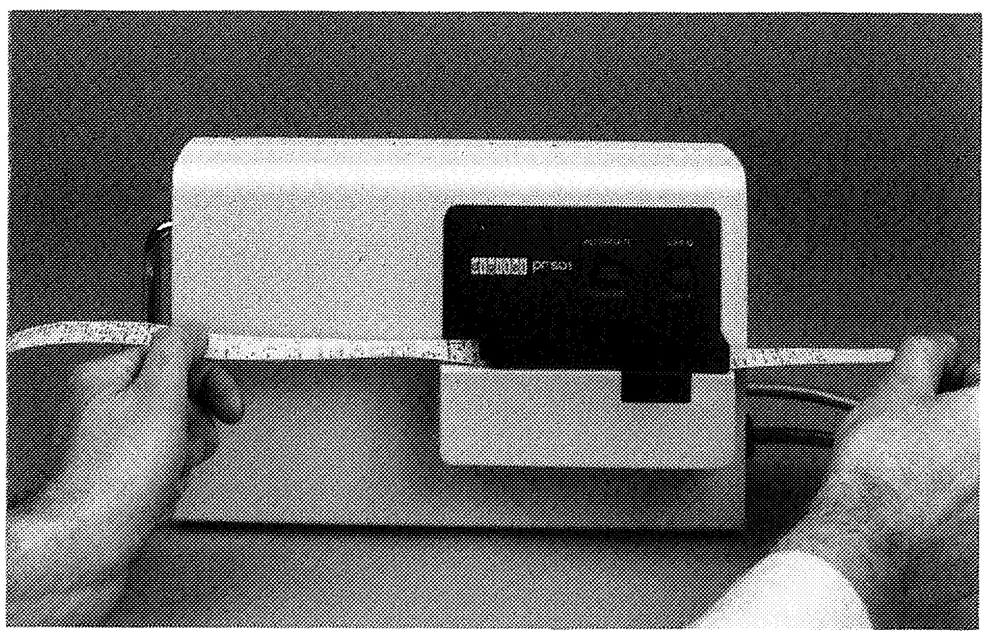

8473-3

C. With both hands, carefully move tape back and forth until feed holes are engaged (that is, tape no longer moves freely). Loading is now complete.

Figure 3-1 Loading Paper Tape

Whenever using paper tape, a few simple precautions should be followed to prevent tape damage and to ensure continual proper operation of the reader. These precautions are as follows.

1. Keep tape clean at all times.

2. Handle tape carefully as it is somewhat fragile.

3. Make certain that tape being fed into the reader is positioned so that it is parallel to the normal path of the tape.

4. Periodicaly blow out the read station to prevent accumulation of paper tape "dust."

CHAPTER 4
INSTALLATION

4.1 INTRODUCTION

This chapter provides the information necessary for connecting the PRS01 reader to a computer system. The chapter is divided into four parts: general cabling information, reader connections, installation, and checkout procedures.

4.2 CABLING INFORMATION

As shown in Figure 4-1, the PRS01 reader can easily be connected to computer systems with or without terminals. If the computer does not have a terminal, an adapter cable is normally used to connect the reader cables to the computer's terminal interface. Because the type of adapter cable needed depends on which computer terminal interface is used, it may have to be purchased separately.

The PRS01 reader converts information read from the paper tape into serial current pulses. Because each pulse is 20 mA, the output of the reader is compatible with any 20 mA current loop line.

Figure 4-2 shows how the PRS01 reader is connected to a typical computer system. Note that the reader is connected to both the console device (host) and a terminal. The terminal, which is typically a keyboard/printer, can send signals to the computer (TRAN portion) and receive signals from the computer (REC portion).

If the computer has a terminal, then the standard interface cable supplied with the reader is used to interconnect the components as shown in Figure 4-2. This interface cable uses a "Y" connection so that it can be inserted between the terminal and its interface. This cable, which is 3 m (10 ft) long, is an integral part of the PRS01 reader. The cable has one female and one male Mate-N-Lok connector as shown in Figure 4-2. Required matching connectors to this cable are as follows.

Computer	Matching female connector for computer cable is:
	Mate-N-Lok number 1-480459-0 with four number 350078-4 pins.
	This connector is supplied with the PRS01.
Terminal	Matching male connector for terminal cable is:
	Mate-N-Lok number 1-480460 with four number 60620-4 pins.

If the computer does not have a terminal, a KL8-J or other asynchronous control can be used. In this case, only the wires to pins 3 and 7 of P1 are used (Figure 4-2).

In some instances, the connectors on the cable supplied with the PRS01 may not match the computer system connectors. For example, it is possible to have a terminal with a female connector, making it impossible to plug into the PRS01 cable which also has a female connector. If this situation should arise, special optional cables may be purchased to connect between the user's equipment and the standard PRS01 cable.

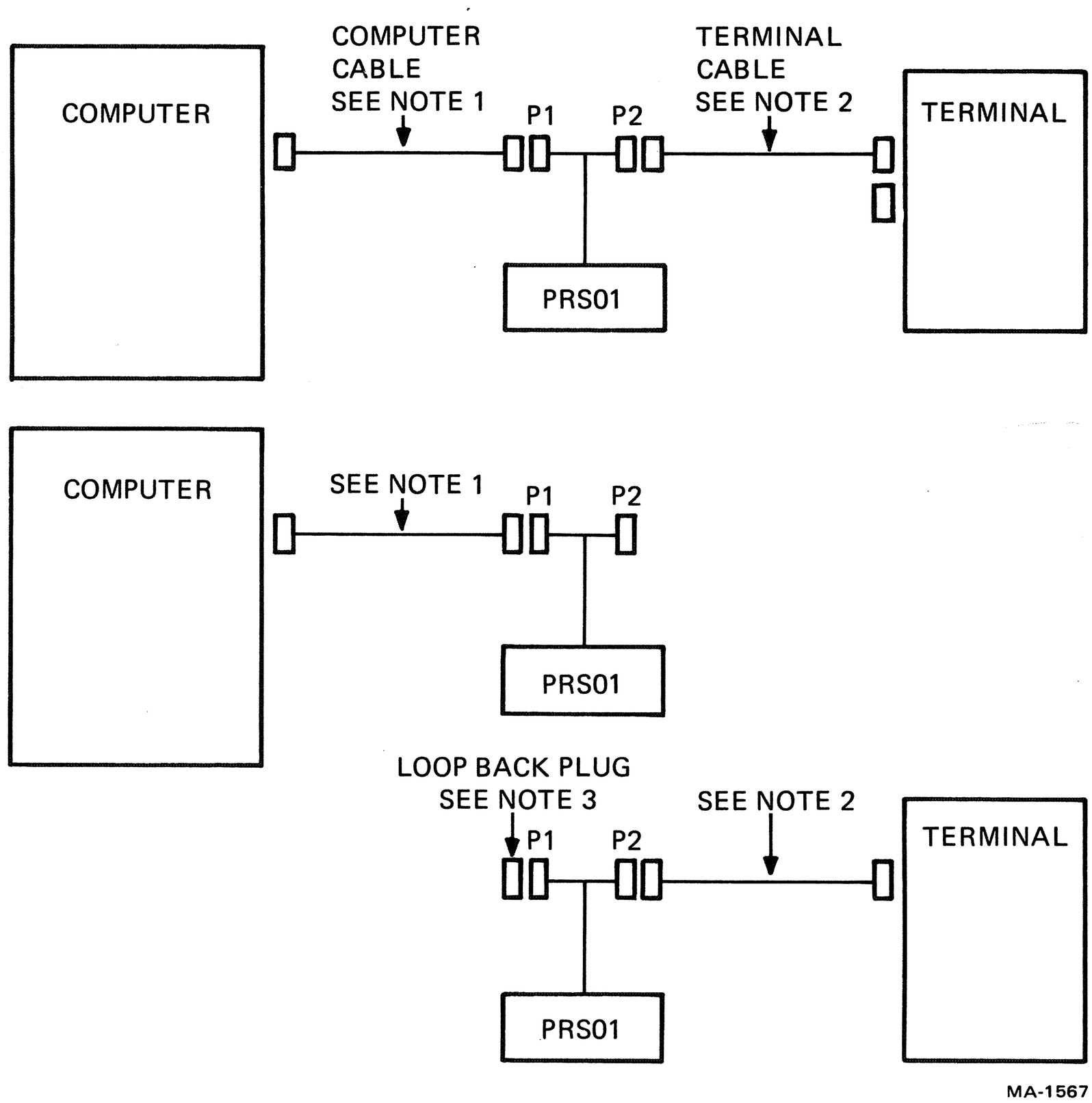

NOTE 1. COMPUTER CABLE CAN BE BC05M FOR SUCH INTERFACES AS KL 8J, DLV11 ETC. OR 70-08360 FOR DL11A, C, W, ETC. OR PRS01 CABLE P1 CAN PLUG DIRECTLY INTO AN INTERFACE MODULE IN CASES SUCH AS KL8I, KL8E, KL8F ETC.

NOTE 2. TERMINAL CABLE CAN BE BC05F FOR TERMINALS SUCH AS LA36 ETC.

NOTE 3. LOOP BACK PLUG IS DESCRIBED IN CHAPTER 5 AS STAND ALONE SYSTEM.

Figure 4-1 Reader Interconnecting Cables

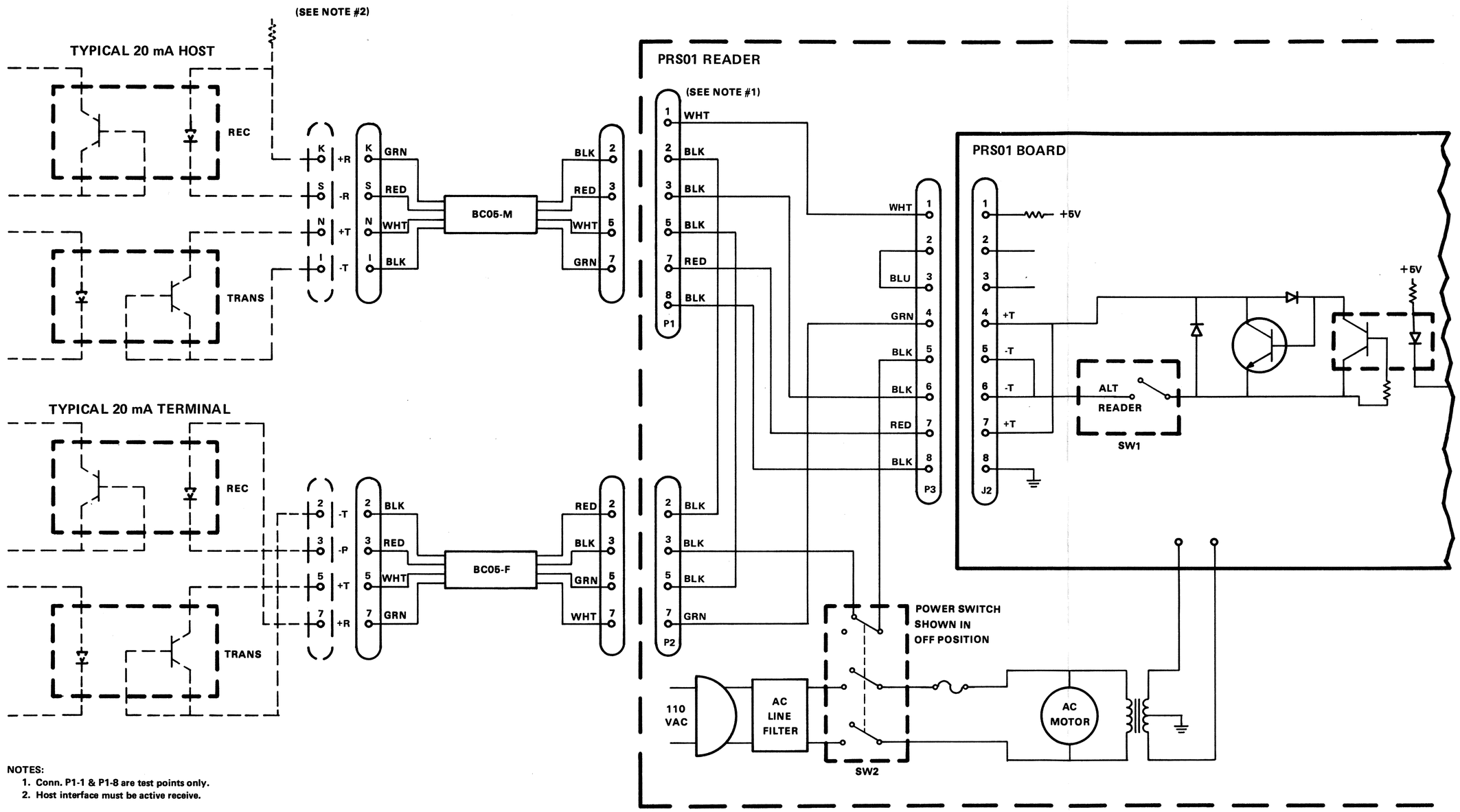

NOTES:
1. Conn. P1-1 & P1-8 are test points only.
2. Host interface must be active receive.

CP-2984

Figure 4-2 PRS01 Schematic Diagram

4.3 INSTALLATION

The procedure for installing the PRS01 reader is given below. Make certain to perform the steps in the sequence given below. Appendix A gives typical jumper/switch configurations for standard interfaces such as the DL11A, DL11W, DLV11, and KL8J.

1. Make sure that the reader is connected to an active 20 mA current loop. If in doubt, insert an ammeter into the current loop line. Current must be 20 mA, within a range of 15 to 30 mA.

2. Make certain that all optional cables are available if needed.

3. Connect the reader according to the schematic diagram in Figure 4-2.

4. Make certain that the reader power ON/OFF switch is OFF and the ALTERNATE/READER switch is in the ALTERNATE position.

5. Plug in the reader ac power cord. This power cord must be plugged into the *switched* ac line of the computer.

Installation of the PRS01 reader is now complete. Procedures for checking proper operation of the reader are given in the next section of this manual.

4.4 CHECKOUT PROCEDURE

The procedure for checking out the PRS01 reader once it has been installed is given below. Make certain to perform the steps in the following sequence.

1. Verify that reader switches are in the OFF and ALTERNATE positions.

2. Check normal operation of the computer system. With the reader switches set as above, the system should operate as before. In other words, it should appear as if nothing has been connected to the system.

3. Load test tape into reader (refer to Paragraph 3.3 for proper loading procedures). Make certain that blank tape (feed holes only) is beneath the read station and at least 15 cm (6 inches) of blank tape are between the read station and the first data character punched on the tape.

4. Enter the diagnostic program that is applicable to the type of computer being used. Two typical diagnostic programs are given in Tables 5-1 and 5-2. On some computers, such as PDP-11/03, PDP-11/04, and PDP-11/34, the console terminal may be used to enter the program. If this is the case and the PRS01 is connected to the console terminal it is necessary to have the ALTERNATE/READER switch in the ALTERNATE position while entering the program.

5. Start the program.

6. Place the ALTERNATE/READER switch in the READER position.

7. Place reader power ON/OFF switch to the ON position.

NOTE

As soon as the reader power ON/OFF switch is set to ON, the tape should move. If it does not, then either the power switch is not getting power or the motor is defective. Check all cabling by referring to the diagram in Figure 4-2.

8. Verify proper operation of the reader. Refer to either Table 5-1 or 5-2 for a description of how the diagnostic program should function. If the reader does not function correctly (that is, the program halts), refer to Chapter 5.

CHAPTER 5
TROUBLESHOOTING AND REPAIR

5.1 INTRODUCTION

This chapter is for users who have decided to perform their own maintenance of the PRS01 reader. It includes the information necessary to maintain, troubleshoot, and repair the reader. Users planning to maintain and repair this device must have some basic knowledge of TTL circuits.

This chapter is divided into three main parts.

- Identifying Problems – Methods of identifying problems by using either the diagnostic program or the loop-back plug
- External Troubleshooting – Covers basic volt/ohmmeter checks, 20 mA circuit tests using an ammeter, and oscilloscope checks
- Internal Troubleshooting – Describes failures and possible solutions for the four main reader components which are read head, motor, transformer, and logic module

5.2 IDENTIFYING PROBLEMS

There are two basic methods that can be used for identifying PRS01 reader problems. One method is used when the reader is connected to a host computer. The other method is used when the reader and a terminal are tested as a stand-alone system.

When used with a computer, the reader can be tested by using a diagnostic program. Paragraph 5.2.1 covers the diagnostic program used with a PDP-8 computer while Paragraph 5.2.2 covers the program used with a PDP-11.

When tested as a stand-alone system, the reader and terminal are connected by means of the loop-back plug. This test is described in Paragraph 5.2.3.

5.2.1 Diagnostic Program for PDP-8

The diagnostic program given in Table 5-1 can be used with any PDP-8 computer provided the computer has a KL8J interface or an interface that is program compatible. The procedure for using this program is given below.

1. Toggle the program into the PDP-8 memory (locations 200 through 225). Note that locations 204 and 206 must contain IOT instructions that reflect the device code of the KL8J to which the PRS01 reader is connected.

2. Place test tape loop into PRS01 reader so that the nulls section of the tape will be read first.

3. Place reader READER/ALTERNATE switch to the READER position.

4. Start the program.

5. Place reader power ON/OFF switch to the ON position.

6. Program will halt at location 216 if it detects an error.

7. If an error occurs, examine location 224 (CHARWS) to determine what was read. Then examine location 223 (CHARSB) to find out what the program was expecting.

8. When the program is running, the accumulator display will reflect the character that the reader is expecting. If these lights always indicate 377, it means that the program is either not reading characters, or that it is reading nothing but all 0s.

   If the program is used with a machine that has no accumulator display, the program can be stopped while it is reading non-zero characters and location 225 can be examined to ensure that non-zero characters can be read.

5.2.2 Diagnostic Program for PDP-11

The diagnostic program given in Table 5-2 can be used with any PDP-11 computer provided the computer has a DL11 interface or an interface that is program compatible.

This diagnostic program expects a tape consisting of nulls, followed by a decrementing pattern starting with 377 and ending with 1, followed by more nulls.

The program will halt at location ERROR if it detects a bad code or a DL11 error bit. When the program halts, location 1040 holds the value of the expected character while R0 holds the value of the character actually received.

Before running this program, make certain that location 1002 contains the address of the DL11 CSR (control and status register).

```
/TOGGLE IN ROUTINE FOR THE PRS01 READER WITH KL8J

                        /TOGGLE IN ROUTINE FOR THE PRS01 READER WITH KL8J
                        /LOCATIONS 200 THRU 225 MUST BE TOGGLED INTO THE PDP-8 MEMORY
                        /THEM PLACE THE TEST TAPE LOOP INTO THE PRS01 READER
                        /SO THAT THE NULLS SECTION OF THE TAPE IS READ FIRST.
                        /SWITCH THE PRS01 READER/ALTERNATE SWITCH TO THE "READER" POSITION.
                        /THEN START THE PROGRAM AND TURN THE PRS01 "ON".
                        /PROGRAM WILL HALT AT LOCATION 216 IF IT SEES AN ERROR
                        /IF AN ERROR OCCURS YOU CAN EXAMINE LOCATION 224(CHARWS) TO FIND OUT WHAT WAS READ
                        /THEN EXAMINE LOCATION 223(CHARSB) TO FIND OUT WHAT THE PROGRAM WAS EXPECTING
                        /WHILE THE PROGRAM IF RUNNING THE ACCUMULATOR LIGHTS WILL
                        /REFLECT THE CHARACTER THAT THE READER IS EXPECTING, IF THEY ARE
                        /ALWAYS 377 IT MEANS THAT THE PROGRAM IS EITHER NOT READING CHARACTERS, OR
                        /IT IS READING NOTHING BUT 000'S. IF THE PROGRAM IS RUNNING ON A MACHINE
                        /THAT HAS NO ACCUMULATOR DISPLAY, THE PROGRAM CAN BE STOPPED
                        /WHILE IT IS READING NON-ZERO CHARACTERS, AND LOCATION 225 EXAMINED TO
                        /INSURE THAT NON-ZERO CHARACTERS CAN BE READ.
                        /LOCATIONS MARKED WITH "***"(0204 AND 0206) MUST CONTAIN IOT INSTRUCTIONS
                        /THAT REFLECT THE DEVICE CODE OF THE KL8J THAT THE PRS01 IS HOOKED UP TO
          0200          *200
0200      7240          GUTNUL, CLA CMA          /PUT -1 INTO THE AC FOR STARTING VALUE OF CHAR WE EXPECT
0201      0222          NXTCHR, AND      EMASK   /PREPARE ERROR BITS SO THAT WE CAN
0202      3223                  DCA      CHARSB
0203      1223                  TAD      CHARSB  /GET CHAR WE EXPECT INTO THE AC
0204      6031          WAITC,  6031             /IS A CHAR READY?                    ***
0205      5204                  JMP      WAITC   /NO. GO BACK AND TRY AGAIN
0206      6036                  6036             /YES. GET ITS VALUE INTO THE AC      ***
0207      7450                  SNA              /IS IT A NULL CHAR, WITH NO ERROR BITS SET?
0210      5200                  JMP      GUTNUL  /YES. IGNORE IT
0211      3224                  DCA      CHARWS  /STORE IT IN CASE OF AN ERROR
0212      1223                  TAD      CHARSB  /GET VALUE OF WHAT CHAR SHOULD BE
0213      7041                  CIA              /COMPLIMENT IT
0214      1224                  TAD      CHARWS  /GET VALUE OF CHAR ACTUALY GOTTEN
0215      7640                  SZA CLA          /DID WHAT WE GOT, MATCH WHAT WE EXPECTED?
0216      7402                  HLT              /NO. BAD CODE OR ERROR BIT SET
0217      7240                  CLA CMA          /-1 TO THA AC TO
0220      1223                  TAD      CHARSB  /DECREMENT THE CODE WE EXPEXT
0221      5201                  JMP      NXTCHR  /GO BACK AND SEE IF WE GET IT
0222      0377          EMASK,  0377
0223      0000          CHARSB, 0000             /CHARACTER PROGRAM WAS EXPECTING
0224      0000          CHARWS, 0000             /VALUE OF THE CHARACTER READ
0225      0000          NZCHAR, 0000             /COUNTDOWN OF# OF NULLS IN A ROW
                        $$
```

Table 5-2 Diagnostic Program for PDP-11

```
MAIN.   MACY11 27(1006)  24-FEB-77  13:25  PAGE 1
DLTOG.P11    24-FEB-77 13:23

                                  .ABS
          001000                  .=1000
          177560                  RBUF=177560
                                  ;THIS IS THE TUGGLE IN TEST ROUTINE FOR THR PRS01 CONNECTED WITH A DL11.
                                  ;IT  EXPECTS A TAPE CONSISTING OF NULLS
                                  ;FOLLOWED BY A DECREMENTING PATTERN STARTING WITH 377 AND ENDING WITH 1,
                                  ;;FOLLOWED BY MORE NULLS
                                  ;THE ROUTINE WILL HALT AT LOCAION "ERROR" IF IT DETECTS
                                  ;A BAD CODE OR A DL11 ERROR BIT
                                  ;WHEN THE PROGRAM HALTS, LOCATION 1040 WILL HOLD THE VALUE OF THE
                                  ;CHARACTER EXPECTED. R0 WILL HOLD THE VALUE OF THE CHAR ACTUALY GOTTEN
                                  ;BEFORE RUNNING THIS PROGRAM MAKE SURE THAT
                                  ;LOCATION 1002 CONTAINS THE DL11 CONTROL/STATUS REGISTER ADDRESS
001000  012703  177560            START:  MOV     #RBUF,R3        ;SETUP THE ADDRESS OF THE DL11 BUFFER REGISTER
001004  012702  001040                    MOV     #ERROR+2,R2     ;SETUP ADDRESS OF CODE WE EXPECT
001010  005004                            CLR     R4              ;ZERO COUNT OF NON-ZERO CHARS
001012  005012                    1$:     CLR     (R2)            ;SET THE CODE WE SHOULD EXPECT TO 0
001014  105713                    3$:     TSTB    (R3)            ;GOT A CHAR FROM THE DL11 YET?
001016  100376                            BPL     3$              ;IF NOT, GO BACK AND WAIT FOR ONE
001020  016300  000002                    MOV     2(R3),R0        ;YES, GOT A CHAR. TAKE IT FROM THE DL11 BUFFER REG
001024  001772                            BEQ     1$              ;IF ITS A NULL GO BACK AND GET THE NEXT CHAR
001026  105312                            DECB    (R2)            ;NOT A NULL. DECREMENT THE EXPECTED VALUE
001030  005204                            INC     R4              ;ADD 1 TO THE COUNT OF NON-ZERO CHARS
001032  020012                            CMP     R0,(R2)         ;IS WHAT WE GOT, WHAT WE EXPECTED TO GET?
001034  001767                            BEQ     3$              ;IF SO, GO BACK AND KEEP TESTING
001036  000000                    ERROR:  HALT                    ;NO. CODE WE GOT AND CODE EXPECTED ARE DIFFERENT
          000001                  .END
```

5.2.3 Stand-Alone System

The following procedure should be used to connect the PRS01 reader to the terminal by means of the loop-back plug shown in Figure 5-1. Make sure to perform the steps in the sequence given below.

1. Disconnect power from both the terminal and the PRS01 reader.

2. Connect the loop-back plug to the male connector of the reader and the terminal to the female connector of the reader as shown in Figure 5-2.

3. Place the reader ALTERNATE/READER switch to the READER position.

4. Apply power to the terminal and set terminal switches to ON LINE.

5. Load test tape (DZPRB-A-PT) into the reader. Make sure to position the tape so that at least 15 cm (6 inches) of blank tape are between the read station and the first data character on the tape.

6. Place the reader power ON/OFF switch to the ON position.

7. The following pattern should be observed. If the reader does not function correctly, refer to Paragraph 5.3.

```
~}|{zyxwvutsrqponmlkjihgfedcba`_^]\[ZYXWVUTSRQPONMLKJIHGFEDCBA@?>=<;:9876543210/.-,+*)('&%$#"!
~}|{zyxwvutsrqponmlkjihgfedcba`_^]\[ZYXWVUTSRQPONMLKJIHGFEDCBA@?>=<;:9876543210/.-,+*)('&%$#"!
~}|{zyxwvutsrqponmlkjihgfedcba`_^]\[ZYXWVUTSRQPONMLKJIHGFEDCBA@?>=<;:9876543210/.-,+*)('&%$#"!
~}|{zyxwvutsrqponmlkjihgfedcba`_^]\[ZYXWVUTSRQPONMLKJIHGFEDCBA@?>=<;:9876543210/.-,+*)('&%$#"!
~}|{zyxwvutsrqponmlkjihgfedcba`_^]\[ZYXWVUTSRQPONMLKJIHGFEDCBA@?>=<;:9876543210/.-,+*)('&%$#"!
~}|{zyxwvutsrqponmlkjihgfedcba`_^]\[ZYXWVUTSRQPONMLKJIHGFEDCBA@?>=<;:9876543210/.-,+*)('&%$#"!
~}|{zyxwvutsrqponmlkjihgfedcba`_^]\[ZYXWVUTSRQPONMLKJIHGFEDCBA@?>=<;:9876543210/.-,+*)('&%$#"!
```

Note that this test patern is a typical pattern for a printer that prints upper- and lowercase characters (such as the LA36). Some terminals might vary in code definitions. If this should be the case, refer to Table 5-3.

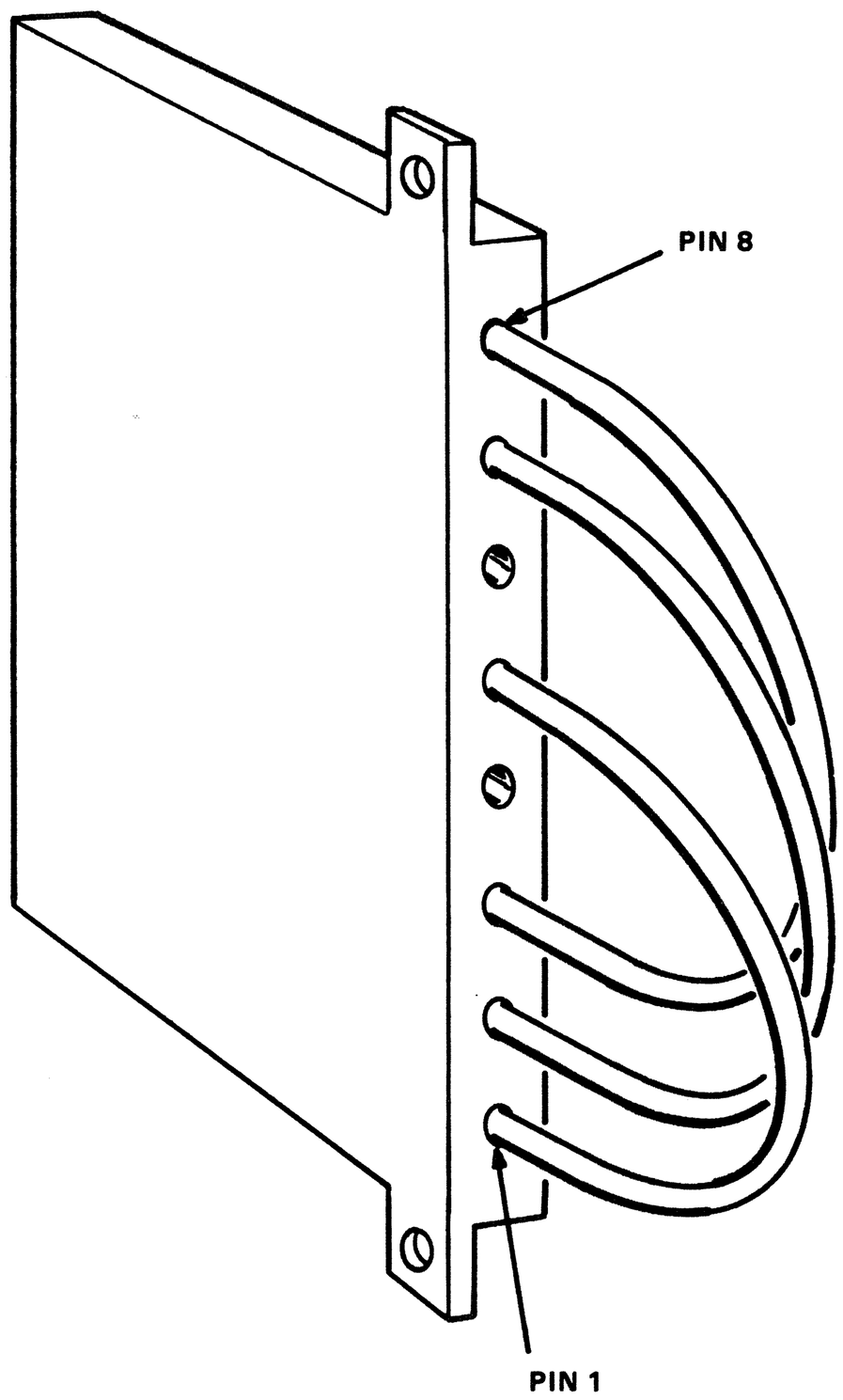

PIN CONNECTIONS

1 TO 5
2 TO 7
3 TO 8

CP-2988

Figure 5-1 Loop-Back Plug (rear view)

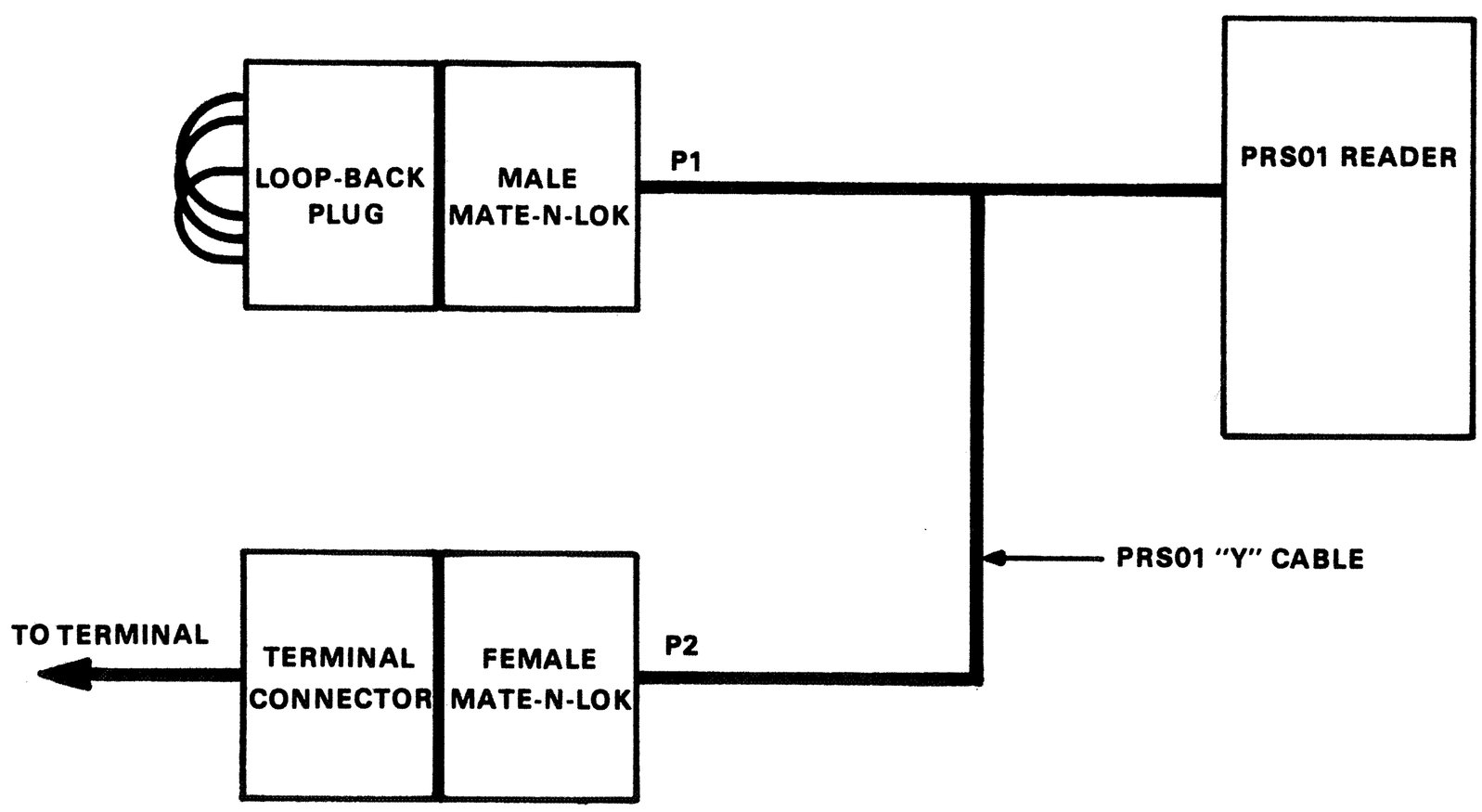

CP-2989

Figure 5-2 Connecting Loop-Back Plug

Table 5-3 Character Code Definitions

NOTE

Some terminals only recognize a 7-bit code. If this is the case, ignore row B8 in the chart.

1	1	1	1	1	1	B8			
Ø	Ø	1	1	1	1	B7			
1	1	Ø	Ø	1	1	B6			
Ø	1	Ø	1	Ø	1	B5			
						B4	B3	B2	B1
SP	Ø	@	P	`	p	Ø	Ø	Ø	Ø
!	1	A	Q	a	q	Ø	Ø	Ø	1
"	2	B	R	b	r	Ø	Ø	1	Ø
#	3	C	S	c	s	Ø	Ø	1	1
$	4	D	T	d	t	Ø	1	Ø	Ø
%	5	E	U	e	u	Ø	1	Ø	1
&	6	F	V	f	v	Ø	1	1	Ø
'	7	G	W	g	w	Ø	1	1	1
(	8	H	X	h	x	1	Ø	Ø	Ø
)	9	I	Y	i	y	1	Ø	Ø	1
*	:	J	Z	j	z	1	Ø	1	Ø
+	;	K	[	k	{	1	Ø	1	1
,	<	L	\	l	|	1	1	Ø	Ø
-	=	M	]	m	}	1	1	Ø	1
.	>	N	^	n	~	1	1	1	Ø
/	?	O	_	o	DEL	1	1	1	1

CP-2997

5.3 EXTERNAL TROUBLESHOOTING

The following paragraphs present three different methods of troubleshooting the PRS01 reader. Each of these methods requires different equipment and a different level of expertise.

5.3.1 Basic Volt/Ohmmeter Checks

These checks can all be made by using a simple volt/ohmmeter.

1. Separate the PRS01 reader completely from the system.
2. Disconnect power from the reader.
3. Place reader ALTERNATE/READER switch to ALTERNATE position.
4. Place reader power ON/OFF switch to the OFF position.
5. Using the information in Table 5-4, check all but the last function.
6. Place reader power ON/OFF switch to the ON position and check the appropriate function in Table 5-4.

NOTE

Although the power switch is ON, there is *no power* applied to the reader at this time.

7. Change meter setting so that it can read 5 V.
8. Apply power to reader and check appropriate function in Table 5-4.

Table 5-4 Volt/Ohmmeter Checks

Required Operation	Meter Check		Meter Scale	Correct Indication	If Not Correct, Possible Trouble
	Probe 1 (black)	Probe 2 (red)			
AC power disconnected	P1, pin 2	P2, pin 2	Ohms	Short	Open wire in cable
	P1, pin 5	P2, pin 5			
Power switch OFF	P1, pin 7	P2, pin 7	Ohms	Short	Bad cable or open power switch
	P1, pin 3	P2, pin 3			
ALTERNATE/READER switch in ALTERNATE position	P1, pin 7	P1, pin 3	Ohms	Open	Bad ALTERNATE/READER switch
Power switch OFF ALTERNATE/READER switch in READER position	P1, pin 7	P1, pin 3	Ohms	Some resistance (forward resistance of diode)	Bad ALTERNATE/READER switch
Power switch ON ALTERNATE/READER switch in ALTERNATE position	P1, pin 3	P2, pin 3	Ohms	Open	Bad power switch
Power applied to PRS01; meter scale changed to volts	P1, pin 8	P1, pin 1	Appropriate to observe 5 V	5 V	Bad module or bad transformer in PRS01 reader

5.3.2 20 mA Circuit Tests

The loop-back plug and an ammeter are required to perform the 20 mA circuit tests.

1. Connect loop-back plug to male connector (P1) of the PRS01 cable.

2. Set ammeter scale to read 20 mA of current.

3. Place reader ALTERNATE/READER switch to READER position.

4. Connect meter leads to female connector (P2) as follows:

   - Positive lead (red) to pin 5
   - Negative lead (black) to pin 2.

5. Place reader power ON/OFF switch to ON position. Meter should indicate a current ranging from 18 to 25 mA. Current may possibly be as high as 35 mA (upper level maximum current for PRS01 output circuit).

6. Place reader ALTERNATE/READER switch to ALTERNATE position and verify that current goes to zero (this step breaks the circuit).

The above checks, performed as indicated, verify that the PRS01 is supplied with 20 mA of current and the output circuits will function properly.

7. Place reader power ON/OFF switch to OFF position.

8. Load diagnostic test tape into reader.

9. Place reader power ON/OFF switch to ON position.

10. Observe that current rises and falls in proportion to the type of bits being read. That is, the current will be higher when reading all 1s, and lower when reading all 0s. This indicates that the PRS01 reader can load and transmit data.

5.3.3 Reader Circuit Tests

The loop-back plug, a paper tape punch, and an oscilloscope are required to perform these circuit tests.

1. Use the paper tape punch to prepare two paper tape loops. One loop should contain all 0s (feedholes only); the other should contain all 1s.
2. Connect the loop-back plug to P1 of the reader.
3. Connect a jumper between pins 2 and 5 of reader plug P2.
4. Place reader ALTERNATE/READER switch to READER position.
5. Load paper tape loop *containing all 0s* into the reader.
6. Place reader power ON/OFF switch to the ON position.
7. Place oscilloscope probe on pin 2 of connector P2. Verify that the signal shown in Figure 5-3 is present.
8. Place reader power ON/OFF switch to the OFF position.
9. Remove the all 0s tape loop and load paper tape loop *containing all 1s* into the reader.
10. Place reader power ON/OFF switch to the ON position.
11. Verify that the signal shown in Figure 5-4 is present.

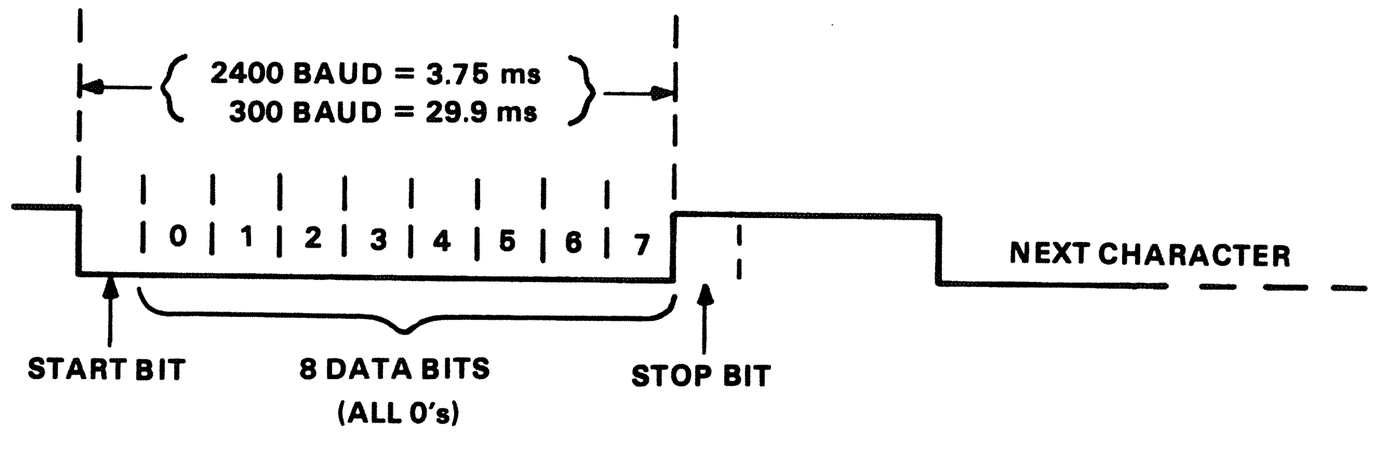

Figure 5-3 Bit Pattern – All 0s

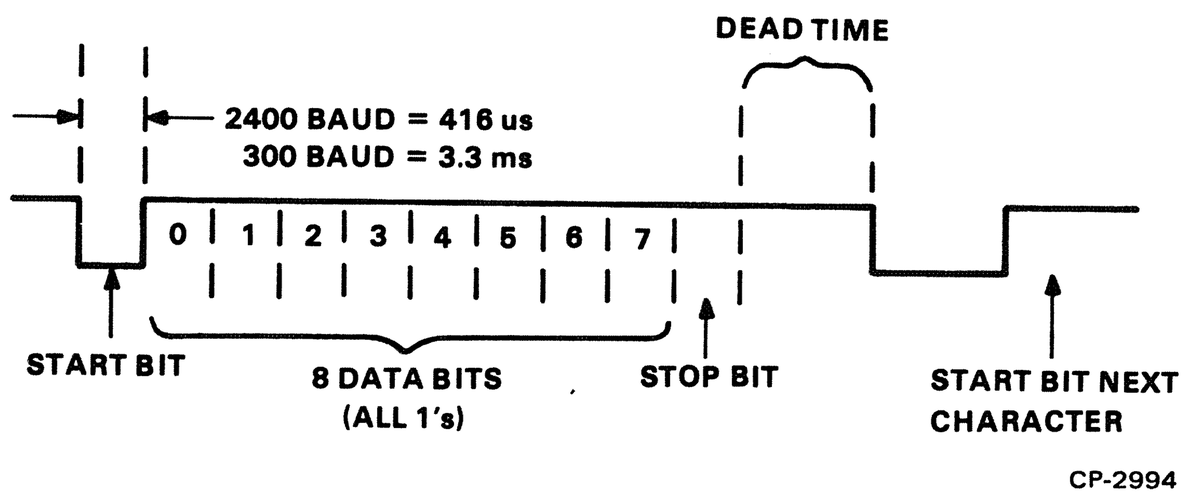

Figure 5-4 Bit Pattern – All 1s

5.4 INTERNAL TROUBLESHOOTING

In order to troubleshoot the internal components of the PRS01 reader, the user must have a complete PRS01 Field Maintenance Print Set, Number MP00232.

If the PRS01 reader is still under warranty, DEC Field Service should be notified if the user is planning to troubleshoot the reader.

Subsequent paragraphs list each of the four main reader components and include trouble symptoms, tests, probable causes, and possible solutions.

5.4.1 Tape Path Problems

Symptom:	Tape movement problems that show up as intermittent data errors.
Test:	Check for 0.010 inch clearance below tape holder (Figure 5-5).
Probable cause:	Out of adjustment.
Solution:	Loosen mounting screw and adjust clearance using appropriate tools.

Symptom:	Same as above.
Test:	Check to ensure that motor mounting bolts are tight.
Probable cause:	Loose mounting bolts.
Solution:	Tighten mounting bolts.

Symptom:	Same as above.
Test:	Check sprocket wheel to ensure it is not loose on shaft.
Probable cause:	Loose set screw.
Solution:	Tighten set screw.

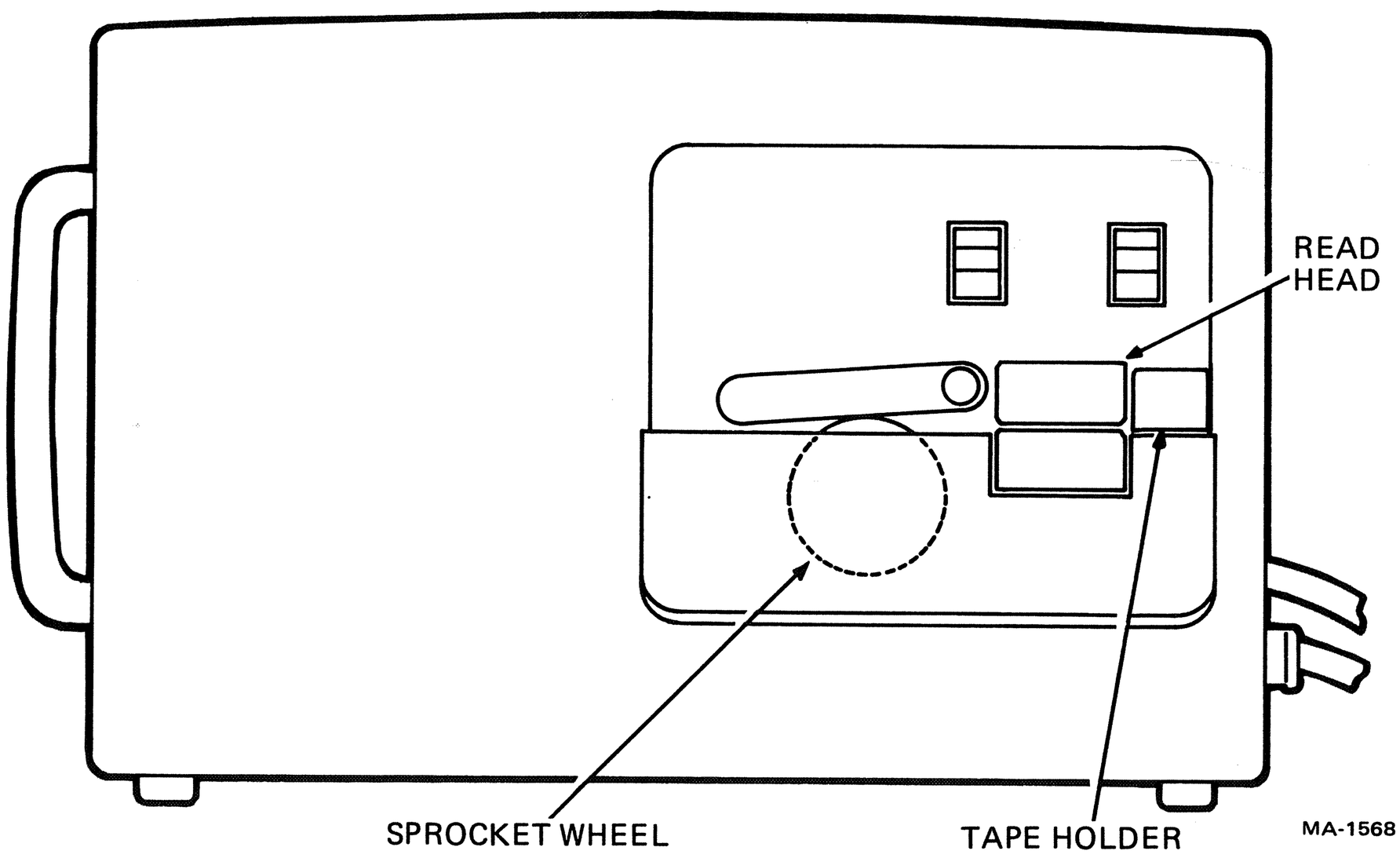

Figure 5-5 Location of Front Panel Components

5.4.2 Motor

Symptom: Motor does not turn when PRS01 power ON/OFF switch is in ON position.

Test: Check 115 V (or 230 V) input at fuse.

Probable cause: Bad fuse.

No input power.

If input power is present and fuse is good, the motor is defective.

Solution: Replace motor.

5.4.3 Transformer

Symptom: +5 V not present on logic module.

Test: Check input voltage to transformer. Refer to print E-UA-PRS01-0-0.

If input voltage present, check ac input to logic module (transformer output).

Probable cause: Defective transformer.

Solution: Replace transformer.

5.4.4 Head

Symptom: No serial output from logic module.

Test: Check to make sure head is plugged into control module with brown wire as pin 1 of J1.

Next, check to make sure there is approximately +3.6 V on pins 6, 7, and 10 of J1.

With no tape in the reader and +5 V power applied, pins 1, 2, 3, 4, 5, 8, 9, 15, and 16 should all be less than 0.5 V.

Use a tape of all 0s and observe that pin 3 is the only pin switching. This is the feedhole that enables the logic. The remaining outputs should be approximately 4 V.

Use a tape of all 1s to check thresholds of the head signals in order to make sure that head signals are within the prescribed points as shown in Figure 5-6.

Probable cause: If all voltages are correct but head signals are not, the head could be loose or it could be defective.

Solution: Make sure head is tightened properly to the front mounting plate. Improper mounting affects alignment of head signals.

If head is mounted properly and problem is still present, then replace head.

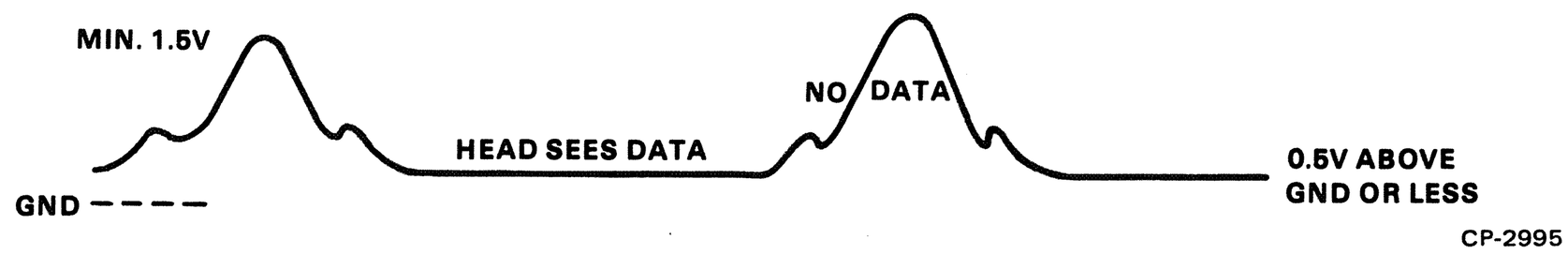

Figure 5-6 Head Signals

5.4.5 Logic Module

If the other PRS01 reader components (motor, transformer, and head) check out properly, the logic module can be checked by using the timing diagram shown in Figure 5-7. This timing diagram is the same for both the 300 baud and 2400 baud models.

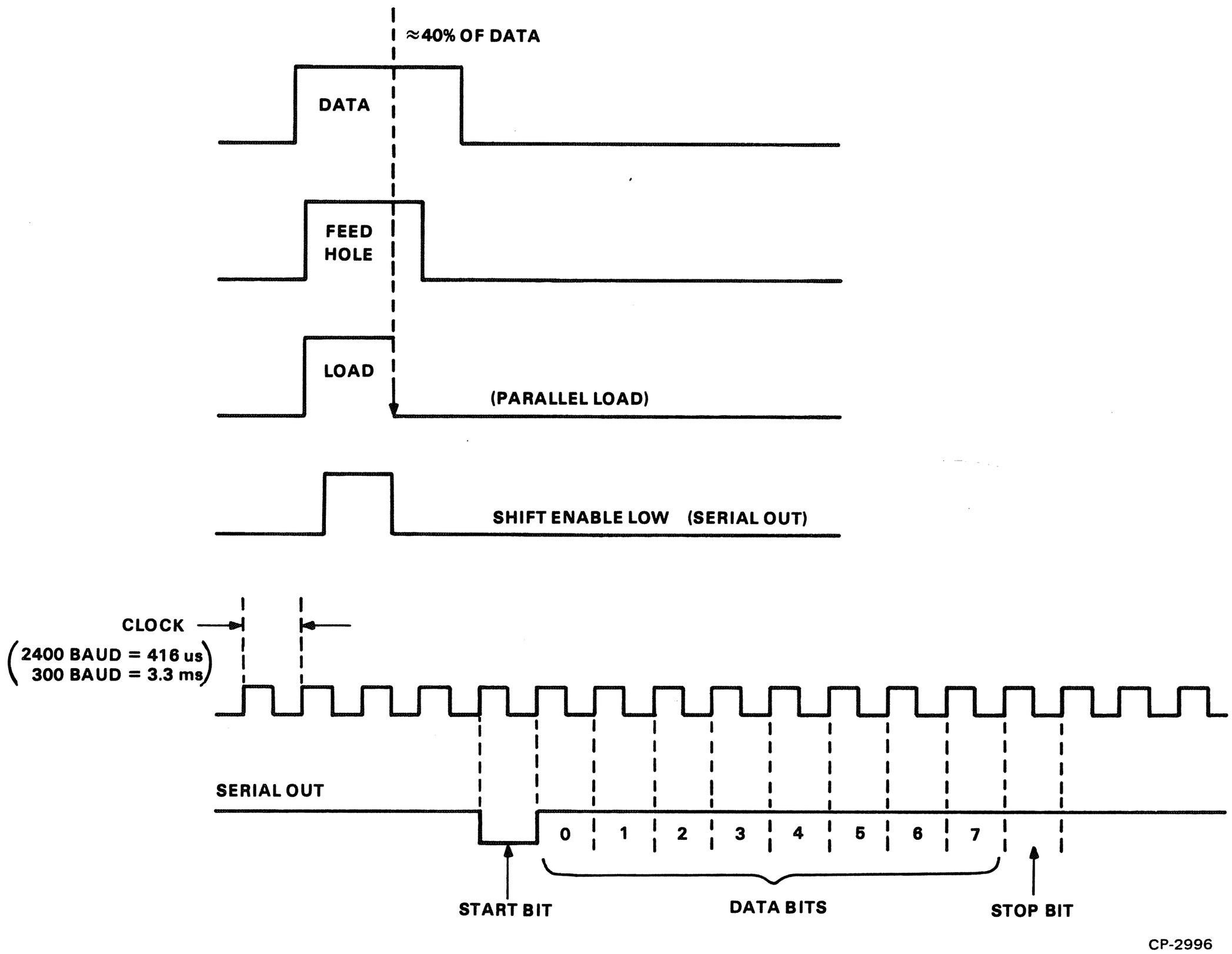

Note: One clock time after shift enable goes low, serial out begins.

Figure 5-7 Timing Diagram

APPENDIX A
JUMPER/SWITCH CONFIGURATIONS

This appendix provides typical jumper/switch configurations for some standard interfaces. These interfaces are:

DL11-A	Figure A-1
DLV11	Figure A-2
KL8J	Figure A-3
DL11W	Figure A-4

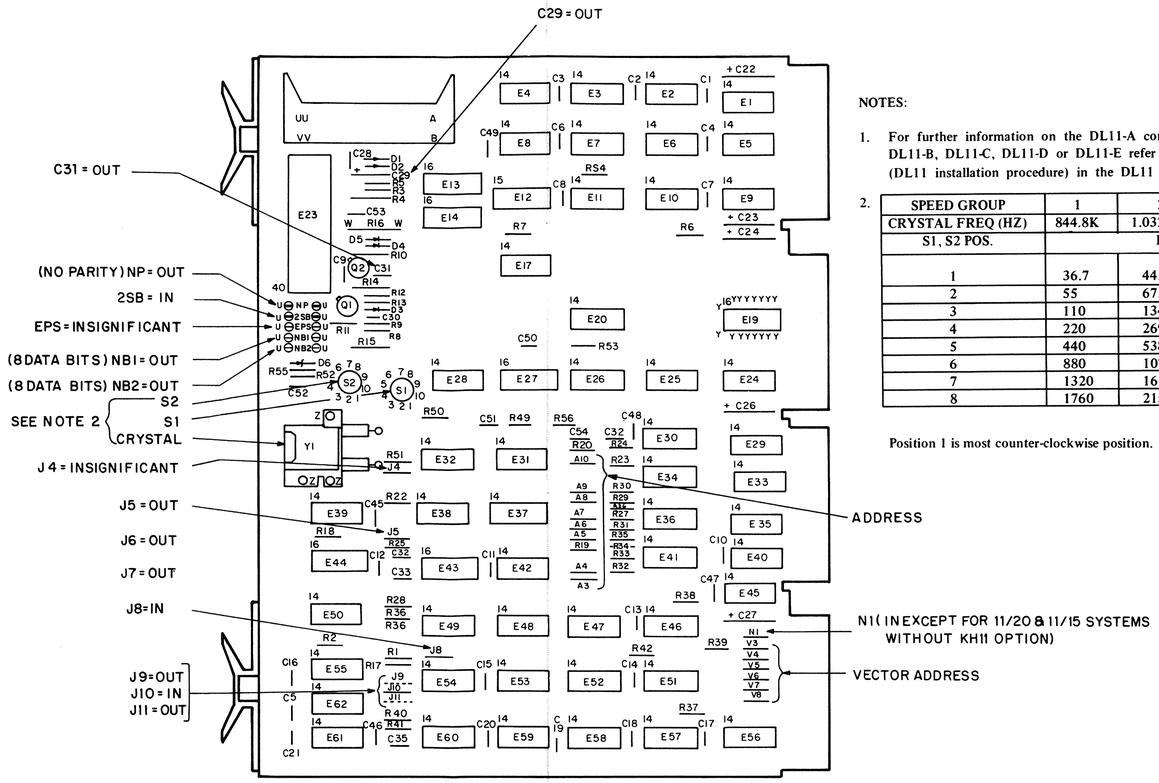

CP-2998

NOTES:

1. For further information on the DL11-A configuration or the installation of DL11-B, DL11-C, DL11-D or DL11-E refer to A-SP-DL11-0-2 (DL11 installation procedure) in the DL11

2.

SPEED GROUP	1	2	3	4
CRYSTAL FREQ (HZ)	844.8K	1.03296M	1.152M	4.608M
S1, S2 POS.	BAUD RATE			
1	36.7	44.8	50	200
2	55	67.3	75	300
3	110	134.5	150	600
4	220	269	300	1200
5	440	538	600	2400
6	880	1076	1200	4800
7	1320	1614	1800	7200
8	1760	2152	2400	9600

Position 1 is most counter-clockwise position.

Figure A-1 DL11-A – Module M7800

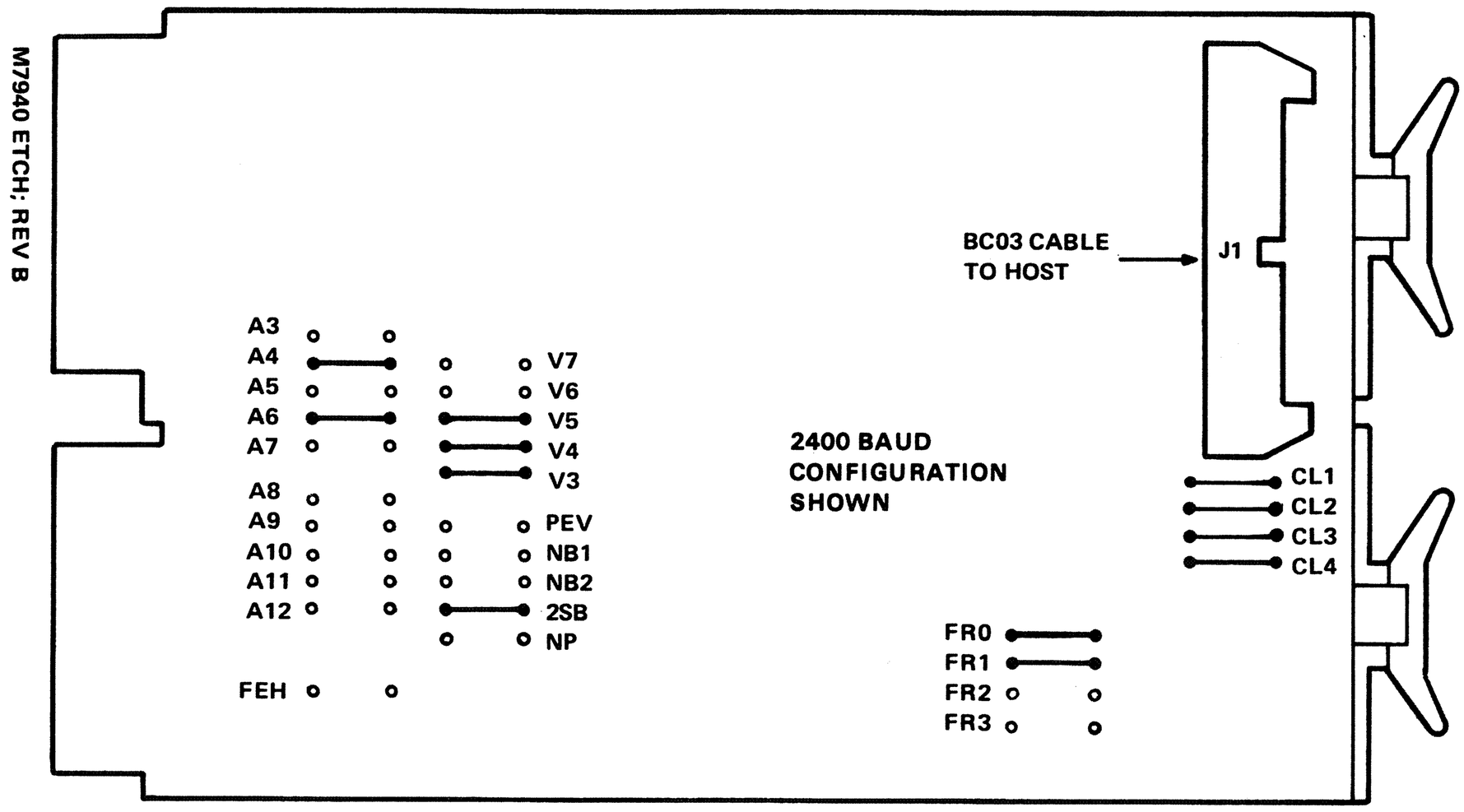

NOTE:

Module shown above is jumpered for:

1) **Standard device address of 177650**
2) **Standard device vector of 300**

CP-2985

Figure A-2 DLV11 – Module M7940

DEVICE CODE AND SPEED SELECTION

TRANSMIT		RECEIVE
←0	B3 B1	←0
←0	R=150=B2	←0
←0	(MD03)	←0
←0	(MD04)	←0
←0	(MD05)	←0
1→	(MD06)	←0
←0	(MD07)	1→
←0	(MD08)	1→

(Arrows indicate depressed switch, ON = 1, OFF = 0. For the example shown, receive device code = 03, transmit device code = 04, and speed = 110 baud.)

R = 150

OFF Transmit and receive speeds are the same.

ON Transmit speed set by B1, B2, and B3. Receive speed is 150 baud.

B1	B2	B3	Baud Rate
0	0	0	110
0	0	1	150
0	1	0	300
0	1	1	600
1	0	0	1200
1	0	1	2400
1	1	0	4800
1	1	1	9600
1	1	1	19200

←1 = ON
0 = OFF

W2 in, W5 out
Normal setting
W2 out, W5 in
Special UART chip required

JUMPER DEFINITIONS

SB/W4	Stop Bits	OUT = 2 Stop Bits	IN = one
NP	No Parity	OUT = No Parity	IN = Parity
EVN	Even Parity	OUT = Even	IN = Odd
NB1 and NB2	Number of Data Bits/Character		

Data Bits/Char	8	7	6	5
NB1	OUT	IN	OUT	IN
NB2	OUT	OUT	IN	IN

SWD/W3 Status Word Enable Out = Disable In = Enable

FIL Filler Character Enable Out = Disable In = Enable
(Installed for VT05 operation above 300 baud)

TTY/W1 Teletype Filter Out = Disable In = Enable
(Installed for 110 baud Teletype operation only)

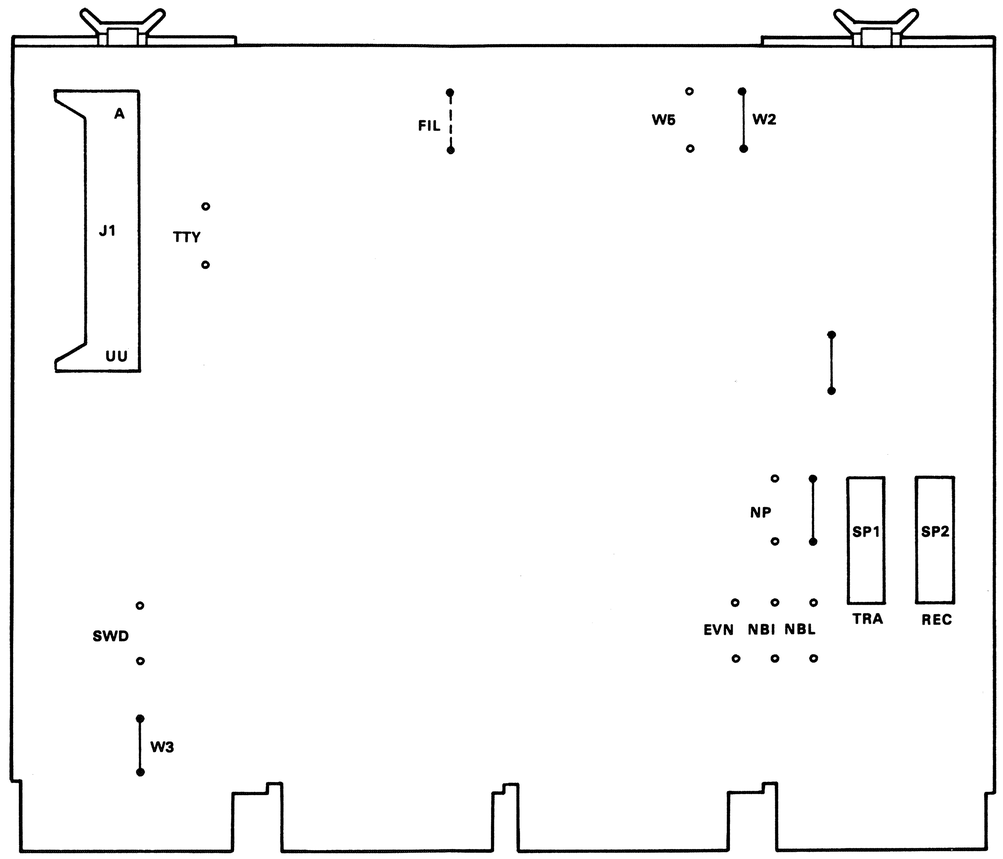

CP-2986

Figure A-3 KL8J – Module M8655

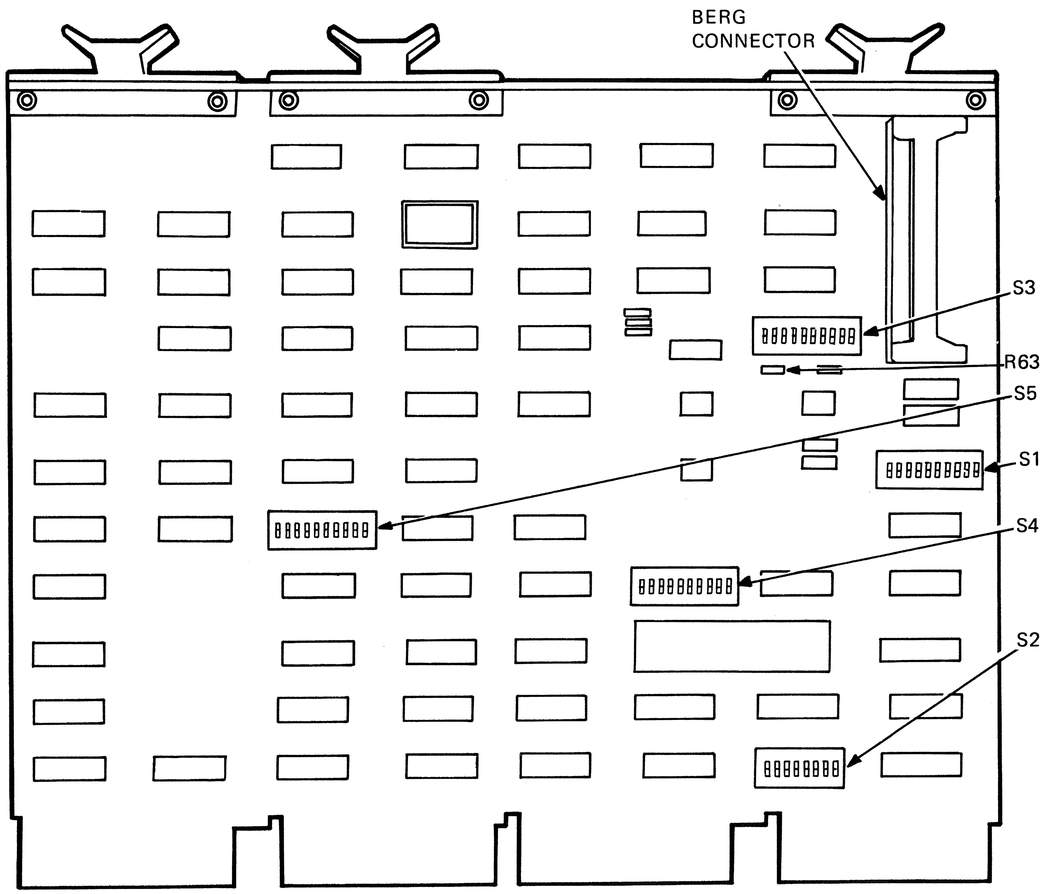

FOR ADDITIONAL INFORMATION ON THE DL11W REFER TO MANUAL EK-DL11W-MM-001.

MA-1569

EXAMPLE 1 – WHEN USING THE DL11W AS AN INTERFACE FOR BOTH THE STANDARD CONSOLE AND ALSO FOR THE PRS01.
RECEIVE = ACTIVE, 300 BAUD OR 2400 BAUD, 20 MA LOOP
TRANSMIT = ACTIVE, 300 BAUD, 20 MA LOOP
FORMAT = 8 DATA BITS, 1 STOP BIT, NO PARITY
ADDRESS = 777560, VECTOR = 60

	1	2	3	4	5	6	7	8	9	10
S1	N	N	F	N	F	F	N	N	F	N
S2	X	X	N	F	F	N	F	F	–	–
S3	F	NOTE 1	N	F	N	N	F	N	F	N
S4	N	N	F	F	N	N	F	X	X	X
S5	F	F	F	N	F	F	N	F	NOTE 2	NOTE 2

N = ON
F = OFF
X = EITHER

EXAMPLE 2 – WHEN USING THE DL11W AS A SEPARATE INTERFACE FOR PRS01 ONLY.
RECEIVE = ACTIVE, 300 OR 2400 BAUD, 20 MA LOOP
TRANSMIT = NOT USED
FORMAT = 8 DATA BITS, 1 STOP BIT, NO PARITY
ADDRESS = 777550, VECTOR = 70

	1	2	3	4	5	6	7	8	9	10
S1	X	X	X	X	X	X	X	X	X	X
S2	X	X	N	N	F	N	F	F	–	–
S3	X	NOTE 1	N	X	N	N	F	N	F	N
S4	X	X	F	F	N	N	F	N	F	N
S5	F	F	F	N	F	F	F	N	N	F

MA-1570

NOTE 1 FOR 300 BAUD S3 - 2 OFF
FOR 2400 BAUD S3 - 2 ON

NOTE 2 FOR LINE CLOCK OPTION S5 - 9 OFF , S5 - 10 ON
FOR NO LINE CLOCK OPTION S5 - 9 ON, S5 - 10 OFF AND REMOVE R63

Figure A-4 DL11W Module M7856