"THE MATERIAL HEREIN IS FOR INFORMATION PURPOSES ONLY AND IS SUBJECT TO CHANGE WITHOUT NOTICE. DIGITAL EQUIPMENT CORPORATION ASSUMES NO RESPONSIBILITY FOR ANY ERRORS WHICH MAY APPEAR HEREIN."

FIELD MAINTENANCE PRINT SET

"THIS DRAWING AND SPECIFICATIONS, HEREIN, ARE THE PROPERTY OF DIGITAL EQUIPMENT CORPORATION AND SHALL NOT BE REPRODUCED OR COPIED OR USED IN WHOLE OR IN PART AS THE BASIS FOR THE MANUFACTURE OR SALE OF ITEMS WITHOUT WRITTEN PERMISSION. COPYRIGHT © DIGITAL EQUIPMENT CORPORATION."

TABLE OF CONTENTS

B-TC-RXV21-0-1	FIELD MAINTENANCE PRINT SET
B-DD-RXV21-0	RXV21 FLOPPY DISK SYSTEM
D-UA-RXV21-0-0	RXV21 FLOPPY DISK SYSTEM ASSY.
B-DD-M8029-0	RXV21 LSI-11, RX02 CONTROLLER
D-UA-M8029-0-0	RXV21 LSI-11, RX02 CONTROLLER ASSY. (SH 1 &6)
K-PL-M8029-0-DBP	RXV21 LSI-11, RX02 CONTROLLER P/L
D-CS-M8029-0-1	RXV21 LSI-11, RX02 CONTROLLER SCHEMATIC
A-PL-RXV21-0-3	RXV21 SOFTWARE LIST
A-PL-RXV21-0-2	RXV21 SHIPPING LIST

UNIT VARIATIONS COVERED BY THIS PRINT SET
RXV21-0
RXV21-AA
RXV21-AC
RXV21-AD
RXV21-BA
RXV21-BC
RXV21-BD
RXV21-DA
RXV21-DC
RXV21-DD
RXV21-EA
RXV21-EC
RXV21-ED

RXV21
Field Maintenance Print Set

Digital Equipment Corporation

PRINT SET ORDER NO.
MP 00628

REV. B
NUMBER RXV21-0-1
CODE TC
SIZE B

REVISIONS

REV	CHG. NO.	DATE
A	RXV21-ML001	1-79
B	RXV21-ML002	
		M. HILERBRANT 3/1/82

DRB 124

USED ON OPTION/MODEL
11/03

SHEET 1 OF 1

DRN. BOB MORIN	DATE 9/8/78	digital	
CHK'D R.P.MORIN	DATE 9/8/78	TITLE: RXV21 FLOPPY DISK SYSTEM	
PROJ. ENG. J.GLAVIN	DATE 9-8-78	SIZE B	CODE TC
FIELD SERV. J.MARTINELLI	DATE 9-8-78	DIST.	NUMBER RXV21-0-1
			REV. B

ML2

"THE MATERIAL HEREIN IS FOR INFORMATION PURPOSES ONLY AND IS SUBJECT TO CHANGE WITHOUT NOTICE. DIGITAL EQUIPMENT CORPORATION ASSUMES NO RESPONSIBILITY FOR ANY ERRORS WHICH MAY APPEAR HEREIN."

DRAWING DIRECTORY

"THIS DRAWING AND SPECIFICATIONS, HEREIN, ARE THE PROPERTY OF DIGITAL EQUIPMENT CORPORATION AND SHALL NOT BE REPRODUCED OR COPIED OR USED IN WHOLE OR IN PART AS THE BASIS FOR THE MANUFACTURE OR SALE OF ITEMS WITHOUT WRITTEN PERMISSION. COPYRIGHT © 1978 DIGITAL EQUIPMENT CORPORATION.

UNIT VARIATIONS

VAR	TITLE
RXV21-Ø	RXV21 LSI-11 RX02 CONTROLLER(M8029)
RXV21-AA	RX02-AA W/RXV21 INTERFACE
RXV21-AC	RX02-AC W/RXV21 INTERFACE
RXV21-AD	RX02-AD W/RXV21 INTERFACE
RXV21-BA	RX02-BA W/RXV21 INTERFACE
RXV21-BC	RX02-BC W/RXV21 INTERFACE
RXV21-BD	RX02-BD W/RXV21 INTERFACE
RXV21-DA	RX02-DA W/RXV21 INTERFACE
RXV21-DC	RX02-DC W/RXV21 INTERFACE
RXV21-DD	RX02-DD W/RXV21 INTERFACE
RXV21-EA	RX02M-EA W/RXV21 INTERFACE
RXV21-EC	RX02M-EC W/RXV21 INTERFACE
RXV21-ED	RX02M-ED W/RXV21 INTERFACE

REVISIONS			
CHK	CHANGE NO.	REV.	
SP	RXV21-ML001	A	
	RXV21-ML002	B	

USED ON OPTION/MODEL: 11/03

SHEET 1 OF 3

DRN.	DATE 8 SEPT 78	TITLE: RXV21 FLOPPY DISK SYSTEM
CHK'D.	DATE 8 SEPT 78	digital
PROJ. ENG.	DATE 9-8-78	SIZE B · CODE DD · NUMBER RXV21-Ø · REV B.
PROD.	DATE 9-8-78	DIST.

DRB 106A

ML 2

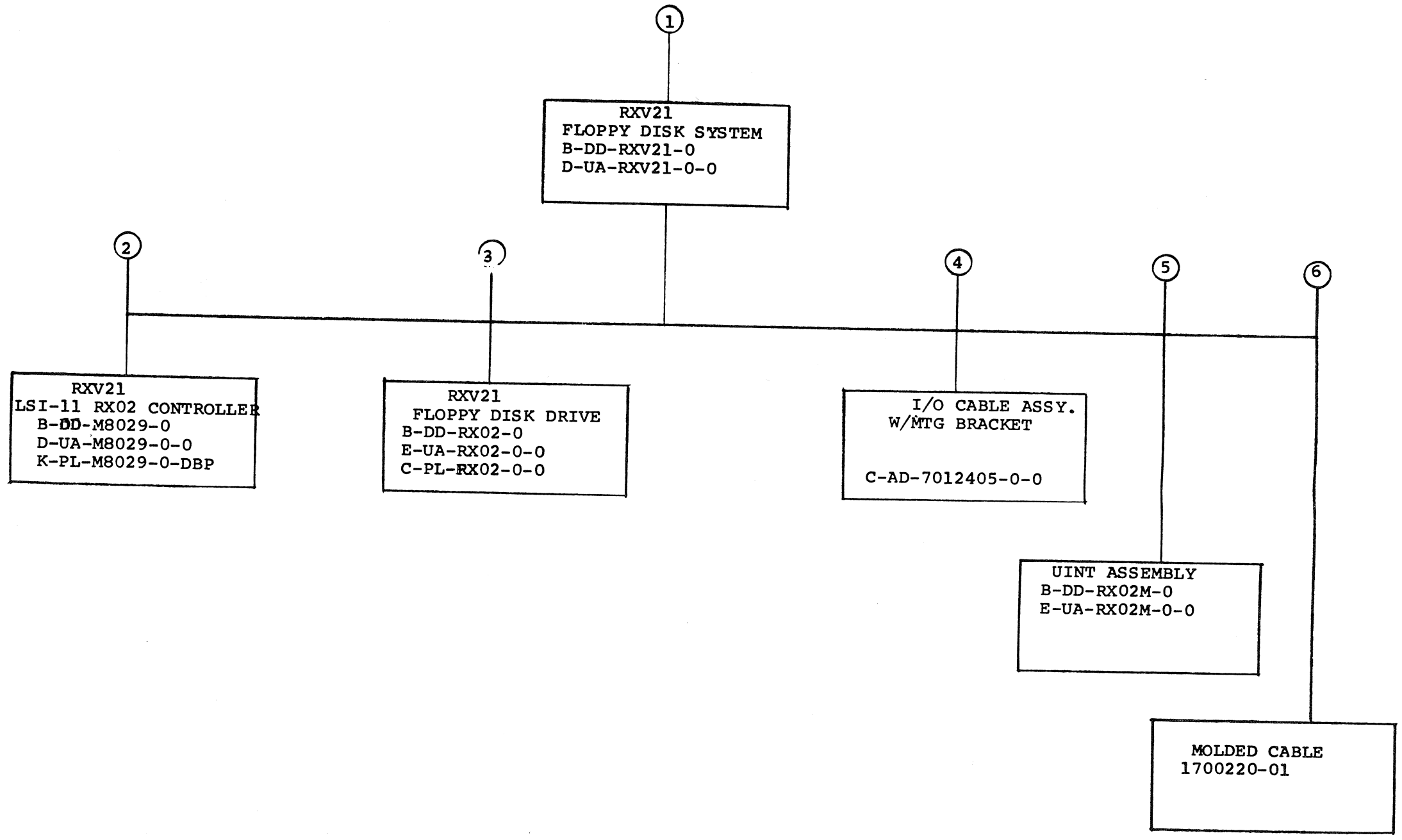

TITLE		SIZE	CODE	NUMBER	REV.
RXV21 FLOPPY DISK SYSTEM	SHEET 2 OF 3	B	DD	RXV21-0	B

DRB-107

FIND NO.	DRAWING NO.	DESCRIPTION	TYPE
1	MP00628	FIELD MAINTENANCE PRINT SET (MP)	-
	B-TC-RXV21-Ø-1	FIELD MAINTENANCE PRINT SET (TC)	-
	B-DD-RXV21-Ø	RXV21 FLOPPY DISK SYSTEM DRAWING DIRECTORY	-
	D-UA-RXV21-Ø-Ø	RXV21 FLOPPY DISK SYSTEM ASSY.	E/M
	D-IA-7412853-Ø-Ø	DUAL DRIVE FRONT PLATE	M
	A-SP-RXV21-Ø-4	RXV21 ENGINEERING SPECIFICATION	-
	K-PL-RXV21-Ø-DBP	RXV21 FLOPPY DISK SYSTEM ASSY.	
2	B-DD-M8029-Ø	RXV21 LSI-11 RX02 CONTROLLER DRAWING DIRECTORY	-
	D-UA-M8029-Ø-Ø	RXV21 LSI-11 RX02 CONTROLLER - ASSY	E
	K-PL-M8029-Ø-Ø	RXV21 LSI-11 RX02 CONTROLLER - P/L	E
	D-CS-M8029-Ø-1	RXV21 LSI-11 RX02 CONTROLLER - CIRCUIT SCHEMATIC	E
3	B-DD-RX02-Ø	RX02 FLOPPY DISK DRIVE SYSTEM - DRAWING DIRECTORY	-
	E-UA-RX02-Ø-Ø	RX02 FLOPPY DISK DRIVE - ASSY	E/M
	C-PL-RX02-Ø-Ø	RX02 FLOPPY DISK DRIVE - P/L	E/M
4	C-AD-7012405-Ø-Ø	I/O CABLE ASSY, W/MTG. BRACKET	E/M
	C-IA-7416923-Ø-Ø	BRACKET, CONN., MOUNTING	M
	C-IA-BC02C-Ø-Ø	I/O CABLE ASSY.	E/M
5	B-DD-RXO2M-Ø	UNIT ASSY (RXO2M)	
	E-UA-RXO2M-Ø-Ø	UNIT ASSY (RXO2M)	
6	17ØØ22Ø-Ø1	MOLDED CABLE	

TYPE: E ELECTRICAL
M MECHANICAL
E/M ELECTRO/MECHANICAL

digital

TITLE	SHEET	SIZE	CODE	NUMBER	REV
RXV21 FLOPPY DISK SYSTEM	3 OF 3	B	DD	RXV21-Ø	B

DRB 108A

ML 2

"THIS DRAWING AND SPECIFICATIONS, HEREIN, ARE THE PROPERTY OF DIGITAL EQUIPMENT CORPORATION AND SHALL NOT BE REPRODUCED OR COPIED OR USED IN WHOLE OR IN PART AS THE BASIS FOR THE MANUFACTURE OR SALE OF ITEMS WITHOUT WRITTEN PERMISSION. COPYRIGHT © 1978 , DIGITAL EQUIPMENT CORPORATION"

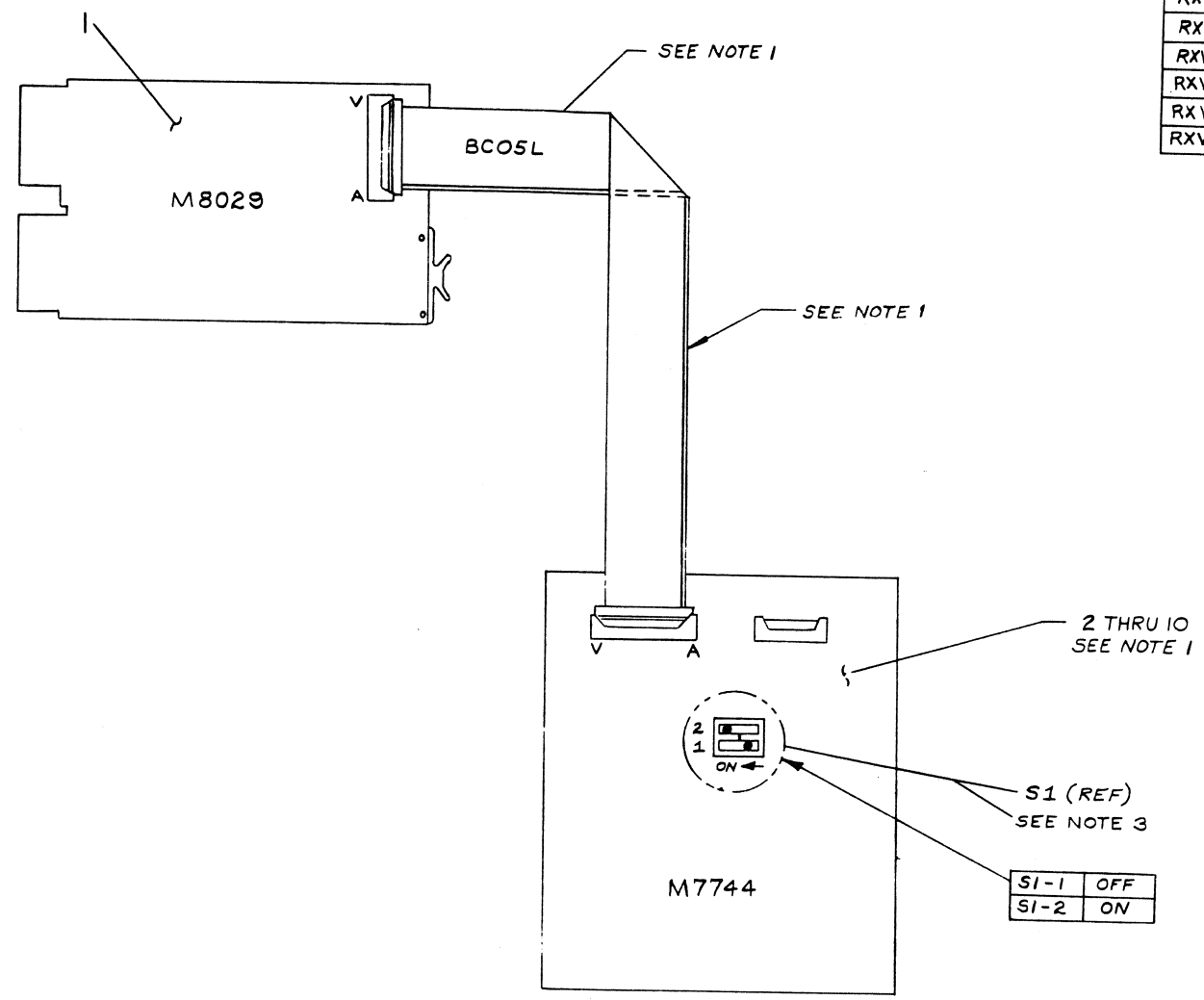

S1-1	OFF
S1-2	ON

VARIATION LEGEND

NUMBER	VARIATION
RXV21-Ø	RXV21 LSI-11 INTERFACE (M8029)
RXV21-AA	RX02-AA & RXV21-Ø INTERFACE, 115V, 60HZ
RXV21-AC	RX02-AC & , 115V, 50 HZ
RXV21-AD	RX02-AD & , 230V, 50 HZ
RXV21-BA	RX02-BA & , 115V, 60 HZ
RXV21-BC	RX02-BC & , 115V, 50 HZ
RXV21-BD	RX02-BD & , 230V, 50 HZ
RXV21-DA	RX02-DA & , 115V, 60 HZ
RXV21-DC	RX02-DC & , 115V, 50 HZ
RXV21-DD	RX02-DD & RXV21-Ø INTERFACE, 230V, 50 HZ
RXV21-EA	RX02M-EA & RXV21-0 INTERFACE, 115V, 60HZ
RXV21-EC	RX02M-EC & RXV21-0 INTERFACE, 115V, 50HZ
RXV21-ED	RX02M-ED & RXV21-0 INTERFACE, 230V, 50HZ

NOTES:

1. MODULE M7744 & CABLE ASSY BC05L ARE SUPPLIED WITH THE RX02 FLOPPY DISK DRIVE ASSY.
2. RED STRIPE ON BC05L CABLE INDICATES PIN "A" ON THE CONNECTOR.
3. THE RX02 DISK CONTROLLER BOARD (M7744) MUST BE SWITCHED CORRECTLY FOR PROPER OPERATION WITH THE RXV21-Ø INTERFACE (M8029). SEE USER'S GUIDE EK-RX02-UG.
4. ITEM 11 IS USED AT D322 OPTION BY REPLACING FALSE FRONT ON BEZEL ASSY. SAME MOUNTING HARDWARE IS RE-USABLE (5 PLACES).
5. ITEMS 12, 13 & 14 ARE USED TO MOUNT BEZEL ASSY TO RX02 CHASSIS.
6. ITEMS #11 THRU #15 NOT SHOWN.

SEE OFF SHEET PARTS LIST:
K-PL-RXV21-0-DBP

REVISIONS			
CHK	CHANGE NO.		REV.
JA/JJ	RXV21-ML002		A
	M. HILDEBRAND	T3/82	
	M. Hildebrand	3/1/82	

DESCRIPTION	DWG./PART NO.	ITEM NO.

UNLESS OTHERWISE SPECIFIED DIMENSIONS ARE IN INCHES

ANGLES ±0° 30'	CLASS OF ACCURACY (CHECK ONE)	NOMINAL DIMENSION RANGE INCHES					
		OVER 0 TO 0.2	OVER 0.2 TO 1.2	OVER 1.2 TO 4.0	OVER 4.0 TO 12.0	OVER 12.0 TO 40.0	OVER 40.0 TO 80.0
SURFACE QUALITY IN MICROINCHES	MEDIUM	±.004	±.008	±.012	±.016	±.024	±.04
	PREFERRED	±.012	±.016	±.025	±.04	±.063	±0.1

QUANTITY & VARIATION

THIRD ANGLE PROJECTION

REMOVE BURRS AND BREAK SHARP CORNERS

DO NOT SCALE DWG

MATERIAL

FINISH

DRN: BCB MORIN MAY/24/78
CHK'D
ENG.
PROJ. ENG.
PROD.

NEXT HIGHER ASSY. B-DD-RXV21-Ø

SCALE NONE

SHEET 1 OF 2

FIRST USED ON LSI-11

digital

TITLE
RXV21 FLOPPY DISK SYSTEM

SIZE	CODE	NUMBER	REV.
D	UA	RXV21-Ø-Ø	A

DIST.

ML2

SIZE	CODE	NUMBER	REV.
D	UA	RXV21-Ø-Ø	A

"THIS DRAWING AND SPECIFICATIONS, HEREIN, ARE THE PROPERTY OF DIGITAL EQUIPMENT CORPORATION AND SHALL NOT BE REPRODUCED OR COPIED OR USED IN WHOLE OR IN PART AS THE BASIS FOR THE MANUFACTURE OR SALE OF ITEMS WITHOUT WRITTEN PERMISSION.
COPYRIGHT © DIGITAL EQUIPMENT CORPORATION"

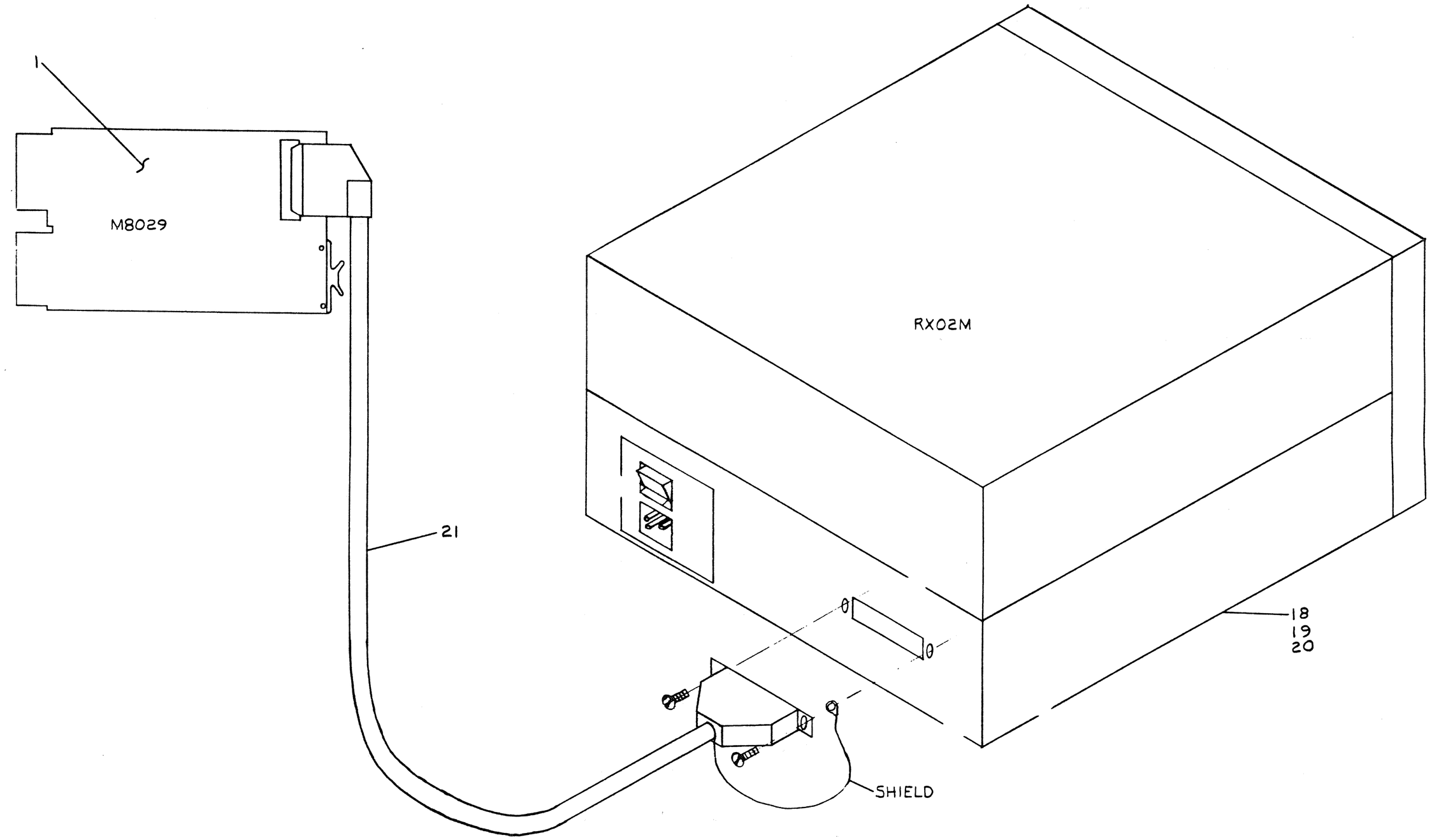

REVISIONS		
CHK	CHANGE NO.	REV.

TITLE	SIZE	CODE	NUMBER	REV.
RXV21 FLOPPY DISK SYSTEM	D	UA	RXV21-0-0	A
SCALE NONE	SHEET 2 OF 2	DIST.	ML2	

SIZE	CODE	NUMBER	REV.
B	DD	M8029-Z	H

DRAWING NO.	NO. OF SHTS.	PART NO.	DESCRIPTION	REVISIONS							
		M8029-0	RXV21 LSI 11 RXØ2 CONTROLLER	*	A	B	C	D	E	F	F
D-UA-M8Ø29-Ø-Ø	1		RXV21 LSI 11 RXØ2 CONTROLLER	B	C	D	E	E	F	H	J
K-PL-M8Ø29-Ø-DBF	2		PARTS LIST DATA BASE	B	C	D	E	E	F	H	J
D-CS-M8Ø29-Ø-1	4		RXV21 LSI 11 RXØ2 CONTROLLER	B	C	D	E	E	F	H	J
D-MD-5013080-0-0	5		DRILL & ETCH DWG.	B	B	B	B	B	C	C	C
		5013Ø8Ø	ETCH BOARD	C	C	C	C	C	D	D	D
M8Ø29-Ø-L			P.C. DESIGN DATA BASE	C	C	C	C	C	D	D	D
D-EC-5013080-0-0	2		ETCH CUT DRAWING	-	-	-	-	-	F	H	H
K-PC-M8Ø29-0-DBC			DATA BASE TAPE	-	-	-	-	-	D	D	D
B-DD-M8029-0	1			-	-	-	-	D	E	F	H
D-UA-M8029-0-0	6			-	-	-	-	E1	E1	E1	E1
B-PL-M8029-0-0	2			-	-	-	-	E1	E1	E1	E1
D-CS-M8029-0-1	4			-	-	-	-	E1	E1	E1	E1

NOTES:

REVISIONS		
DATE	CHG NO.	REV.
5-78	00001	A
11-78	ML002	B
11-79	ML003	C
3-80	ML004	D
8-80	ML005	E
3-82	ML006	F
11-83	SH007	H

"THIS DRAWING AND SPECIFICATIONS, HEREIN, ARE THE PROPERTY OF DIGITAL EQUIPMENT CORPORATION AND SHALL NOT BE REPRODUCED OR COPIED OR USED IN WHOLE OR IN PART AS THE BASIS FOR THE MANUFACTURE OR SALE OF ITEMS WITHOUT WRITTEN PERMISSION.

COPYRIGHT© 1978 DIGITAL EQUIPMENT CORPORATION

DRB 126

digital

USED ON OPTION/MODEL	
RXØ2	

DRN.	S. JUTTLE	12/20/77
CHK'D	D. Bassman	3 JAN 78
ENG.	Jerry L. Ryan	24 FEB 78
PROD.	[illegible]	23 FEB 78

TITLE RXV21 LSI 11 RXØ2 CONTROLLER

SIZE	CODE	NUMBER	REV.
B	DD	M8Ø29-Z	H

SHEET 1 OF 1

SHO

THESE DRAWINGS AND SPECIFICATIONS, HEREIN, ARE THE PROPERTY OF DIGITAL EQUIPMENT CORPORATION AND SHALL NOT BE REPRODUCED OR COPIED OR USED IN WHOLE OR IN PART AS THE BASIS FOR THE MANUFACTURE OR SALE OF ITEMS WITHOUT WRITTEN PERMISSION.
COPYRIGHT © 1984 DIGITAL EQUIPMENT CORPORATION

REWORK, WIRE ADDS

6-1 ADD ON SIDE 1, A WIRE FROM E7 PIN 15 TO E1 PIN 3

6-2 ADD ON SIDE 1, A WIRE FROM E4 PIN 5 TO E17 PIN 2

6-3 ADD ON SIDE 1, A WIRE FROM E4 PIN 13 TO E18 PIN 15

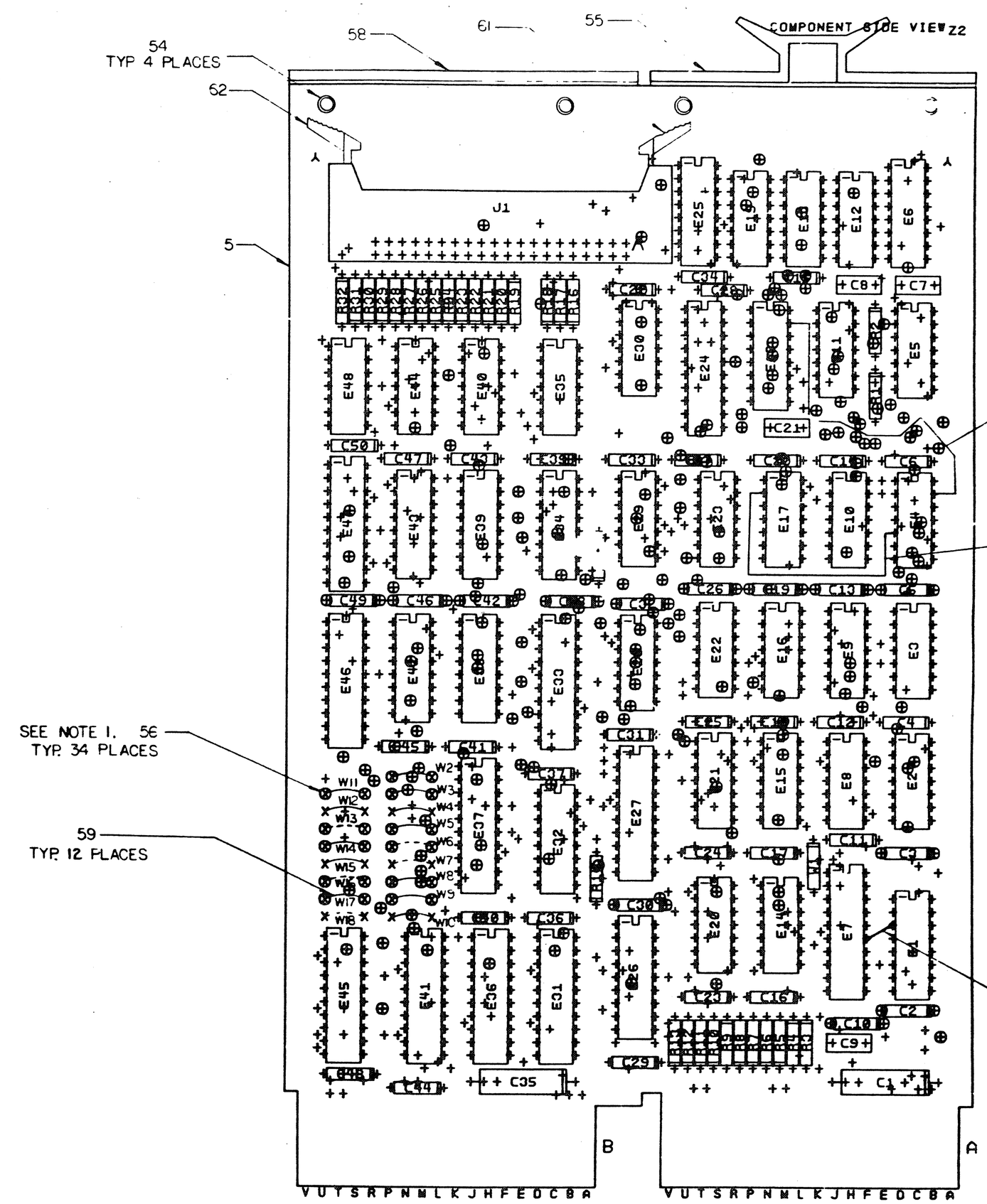

NOTES:

1. ITEM #56 ARE WIRE WRAP PINS. W2 THRU W18

STEP & REPEAT	↑ Y AXIS ____ STEP ____ TIMES
	← X AXIS ____ STEP ____ TIMES

CHK	CHANGE NO	REV
		F
		H
		J

ETCH REV. D-P3

SIGNATURES	DATE
DRN. J FITZGERALD	
CHK'D.	
MECH.ENG.	
PROJ.ENG.	
PROD.	
SCALE 2/1	
SHT. 1 OF 1	
NEXT HIGHER ASSY. B-CD-M8029-0	

digital

TITLE RXV21 LSI RXC2 CONTROLLER

SIZE	CODE	NUMBER	REV
D	UA	M8029-0-0	J

SH.0

1 MS# 263735

TY Z1029H.LST
AUTOMATED BY PRTLST.2D(12)

P A R T S L I S T

LINE	ITEM	DOCUMENT NUMBER	PART NUMBER	DESCRIPTION	QTY PER VARIATION 00	REFERENCE DESIGNATOR
1	1	D-CS-M8029-0-1		CIRCUIT SCHEMATIC	REF	
2	2	D-UA-M8029-0-0		UNIT ASSY	REF	
3	3	B-DD-M8029-0-0		DWG DIRECTORY	REF	
4	4	D-MD-5013080-0-0		DRILL &ETCH DWG	REF	
5	5		5013080-00	M8029	1	
6	6		1000016-00	100.0 MMF 100V 5%200PPM MICA	1	C8
7	7		1000018-00	120.0 MMF 100V 5%200PPM MICA	1	C21
8	8		1001610-00	.01 MFD 50V +80-20% Z5U CER	44	C2-C6,C10-C20,C22-C34,C36-C50
9	9		1017472-00	10 MFD 35V +50-10% AL EL	2	C1,C35
10	10		1000042-00	1000.0 MMF 100V 5%200PPM MICA	1	C7
11	11		1012121-00	220.0 MMF 100V 1%200PPM MICA	1	C9
12	12		1105275-00	*** THIS ITEM IS NOT USED ***	-	
13	13		1209941-02	PCB,HEADER 40PIN(2X20).100CC 90D	1	J1
14	14		1300247-00	120.0 .25 W 5.0 % CC	1	R19
15	15		1300295-00	330.0 .25 W 5.0 % CC	4	R5,R7,R10,R13
16	16		1300309-00	390.0 .25 W 5.0 % CC	6	R17,R20,R23,R24,R28,R30
17	17		1300365-00	1.0 K .25 W 5.0 % CC	4	R3,R14,R16,R26
18	18		1300479-00	10.0 K .25 W 5.0 % CC	1	R1
19	19		1301322-00	180.0 .25 W 5.0 % CC	7	R18,R21,R22,R25,R27,R29,R32
20	20		1301424-00	680.0 .25 W 5.0 % CC	4	R6,R8,R11,R12
21	21		1301972-00	270.0 .25 W 5.0 % CC	1	R9
22	22		1305265-00	39.20 K .25 W 1.0 % RN55D-F10	1	R2
23	23		1304856-00	4.64 K .25 W 1.0 % RN55D-F10	1	R4
24	24		1909705-00	DEC 8881 NAND GATE-QUAD 2IN O	2	E20,E35
25	25		1910155-00	DEC 7408 AND GATE,POS.QUAD 2I	1	E16
26	26		1910436-00	DEC 74123 ONE SHOT-DUAL,RETRIG	1	E6
27	27		1910544-00	74S74 FF-D DUAL,EDGE TRIGG	1	E5
28	28		1912854-00	LS193 COUNTER,SYNCHR,4BIT,	1	E25
29	29		1911469-00	DEC 8640 RECEIVER,BUS,QUAD,U	3	E14,E44,E48
30	30		1911527-00	8097 BUFFER GATE-HEX 2INP	3	E38,E39,E42

REVISION HISTORY			BASIC PART NO: M8029											
ENG	ECO NUMBER	REV	SECTION A OF A	DRN: STEVE MARLOW	DATE: 11-MAY-78	D	I	G	I	T	A	L
W.H	00000	B	SECTION.VARIATION INDEX	CHK'D: W.CASSIDY	DATE: 11-MAY-78	TITLE PARTS LIST						
W.H	00001	C	[A] 00			RXV21 LSI11 RX02 CONTROLLER						
C.Y	ML002	D	[B]	DES.ENG: JENNY RYAN	DATE: 11-MAY-78							
JR	M8029-ML003	E	[C]									
DP	M8029-ML005	F	[D]	RESP.ENG.: JENNY RYAN	DATE: 11-MAY-78	DOCUMENT NUMBER						
MH	M8029-ML006	H	[E]			SIZE	CODE	NUMBER	REV			
			[F]	MFG.ENG.: K.MERCADO	DATE: 11-MAY-78	K	PL	M8029-0-DBP	H			
			[H]									
			[J]									
			[K]									
			[L]									
			[M]	ASSEMBLY NUMBER: D-UA-M8029-0-0	TOP DOCUMENT NUMBER: *B-DD-M8029-0	FILE NAME: Z1029H.PLS	EDIT # 18					
			[N]									

"THIS DRAWING AND SPECIFICATIONS HEREIN, ARE THE PROPERTY OF DIGITAL EQUIPMENT CORPORATION AND SHALL NOT BE REPRODUCED OR COPIED OR USED IN WHOLE OR IN PART AS THE BASIS FOR THE MANUFACTURE OR SALE OF ITEMS WITHOUT WRITTEN PERMISSION.
COPYRIGHT (C) 1982, DIGITAL EQUIPMENT CORPORATION "

ML 2

AUTOMATED BY PRTLST.2D(12)

P A R T S L I S T

LINE	ITEM	DOCUMENT NUMBER	PART NUMBER	DESCRIPTION	QTY PER VARIATION 00	REFERENCE DESIGNATOR
31	31		1911579-00	8641 TRANSCEIVER,BUS,QUA	1	E1
32	32		1912647-00	LS257 MUX 1 OF 2 (QUAD)	1	E34
33	33		1912697-00	LS174 FF-D HEX W/CLEAR	1	E43
34	34		1912729-00	DC 004 PROTOCOL,REG. SELECT	1	E27
35	35		1912730-00	DC 003 INTERRUPT,2 CIRCUIT	1	E26
36	36		1912799-00	LS00 NAND-GATE-QUAD 2IN,P	1	E9
37	37		1912801-00	LS02 NOR-GATE-QUAD 2IN	3	E3,E11,E21
38	38		1912803-00	LS04 INVERTER GATE,HEX	2	E15,E19
39	39		1912805-00	LS08 AND GATE-QUAD 2IN,PO	1	E22
40	40		1912807-00	LS10 NAND GATE-TRIPLE 3IN	2	E17,E30
41	41		1912816-00	LS32 OR GATE-QUAD 2IN,POS	3	E2,E28,E40
42	42		1912824-00	LS74 FF-D DUAL,EDGE TRIGG	3	E10,E12,E29
43	43		1912849-00	LS161 COUNTER,SYNCHR,4BIT	1	E32
44	44		1912868-00	LS299 SHIFT REG. 8-BIT UNI	2	E33,E37
45	45		1913040-00	DC 005 TRANSCEIVER 4BIT	4	E31,E36,E41,E45
46	46		1914035-00	DC 006 BIPOLAR,BUS ADDRESS	2	E46,E47
47	47		1914038-00	DC 010 BIPOLAR,MEM ADRESS,L	1	E7
48	48		1811660-12	OSCILLATOR, XTAL 8.200 MHZ	1	E8
49	49		1912821-00	LS54 A-O-I GATE,3-2-2-3IN	1	E13
50	50		1910652-00	74174 FF-D HEX	1	E18
51	51		1909686-00	7404 INVERTER GATE-HEX 1I	1	E23
52	52		1911521-00	7432 OR GATE-QUAD 2IN, PO	1	E4
53	53		23065B1-00	B1-01	1	E24
54	54		9006732-00	EYELET,ROLLED 0.1210DX0.219	4	
55	55		9009337-06	HANDLE, FLIP CHIP, MAGENTA	1	
56	56		9009149-01	PIN,STAKING 0.235 HX0.345LG SQUA	34	
57	57		9009185-00	JUMPER, WIRE, INSULATED, BLACK B	1	W1
58	58		9009781-00	SPACER, MODULE, MAGENTA	1	
59	59		9105740-55	WIRE(WRAP)30AWG UL1423	12	W2-W5,W8-W12,W14,W15,W17
60	60		1303114-00	1.0 K .25 W 1.0 % RN55D-F10	1	R15
61	61		1209941-03	PCB,HEADER LATCH	1	
62	62		1209941-04	PCB,HEADER LATCH	1	
63	63		1001610-01	*** THIS ITEM IS NOT USED ***	-	
64	64		1301425-00	300.0 .25 W 5.0 % CC	1	R31
65	65	D-EC-5013080-0-0		ETCH CUT DRAWING	0	

D	I	G	I	T	A	L	TITLE	SECTION A OF A	SIZE	CODE	DOCUMENT NUMBER	REV
							RXV21 LSI11 RX02 CONTROLLER		K	PL	M8029-0-DBP	H

"THIS DRAWING AND SPECIFICATIONS, HEREIN, ARE THE PROPERTY OF DIGITAL EQUIPMENT CORPORATION AND SHALL NOT BE REPRODUCED OR COPIED OR USED IN WHOLE OR IN PART AS THE BASIS FOR THE MANUFACTURE OR SALE OF ITEMS WITHOUT WRITTEN PERMISSION. COPYRIGHT © 1977 , DIGITAL EQUIPMENT CORPORATION"

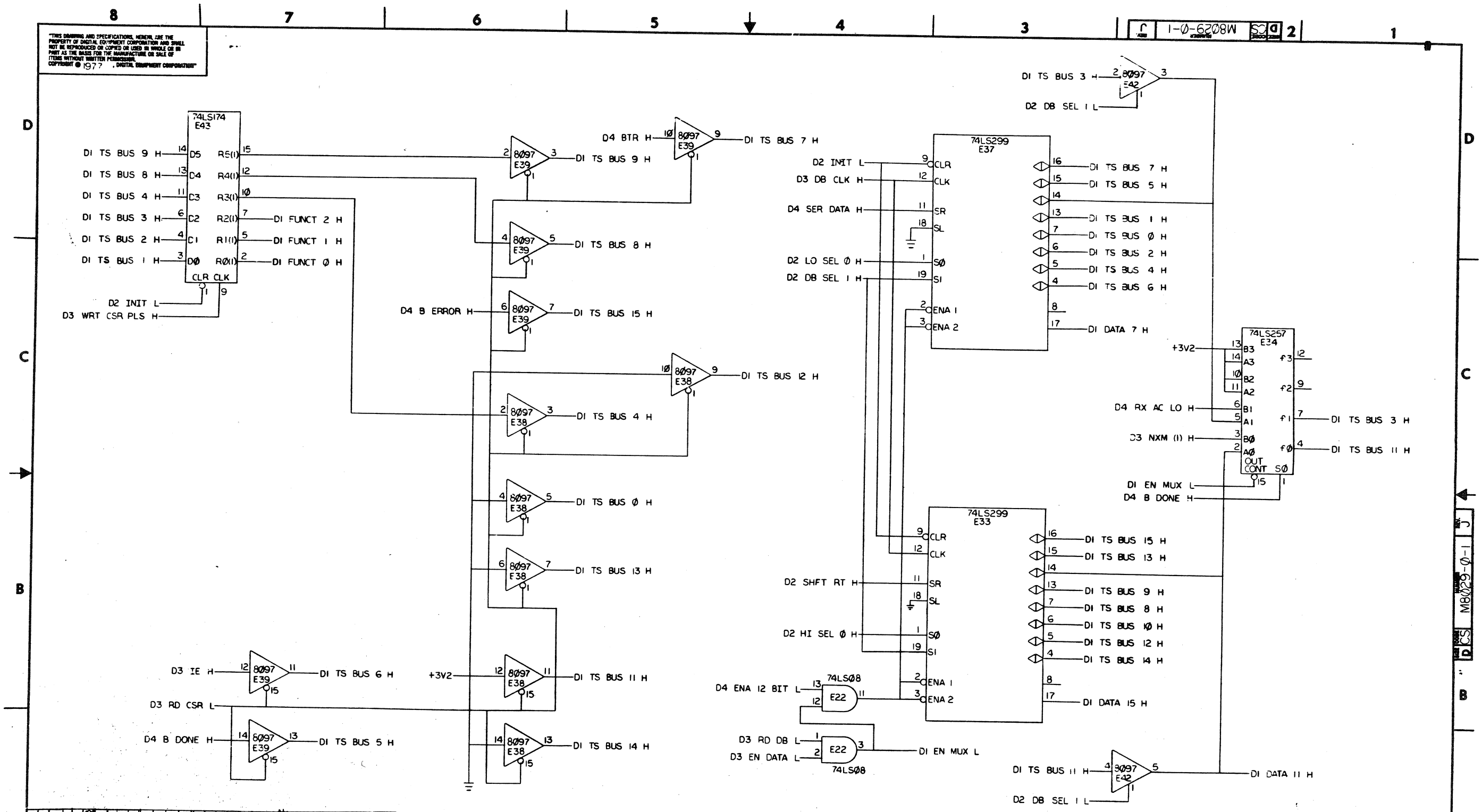

REVISIONS			
CHK	CHANGE NO.		REV.
	M8029-(0001)		C
J GLAVIN			
	M8029-ML002		D
C. YOUSE			
	M8029-ML003		E
J. RYAN			
	M8029-ML005		F
D. POWER			
	M8029-ML006		H
M. HILDEBRANT			
	M8029-SHOOT		J
C.K. PEGUAL 11-7-83			
P. SOLOMON			

DRN		FIRST USED ON	RX02
CHK		TITLE	RXV21 LSI11 (DI) CONTROLLER
ENG			
PROJ. ENG			
PROD			
NEXT HIGHER ASSY.	B-DD-M8029-Ø	SIZE D	CODE CS
SCALE		NUMBER M8029-Ø-1	REV. J
SHEET 1 OF 4		DIST.	

SHO

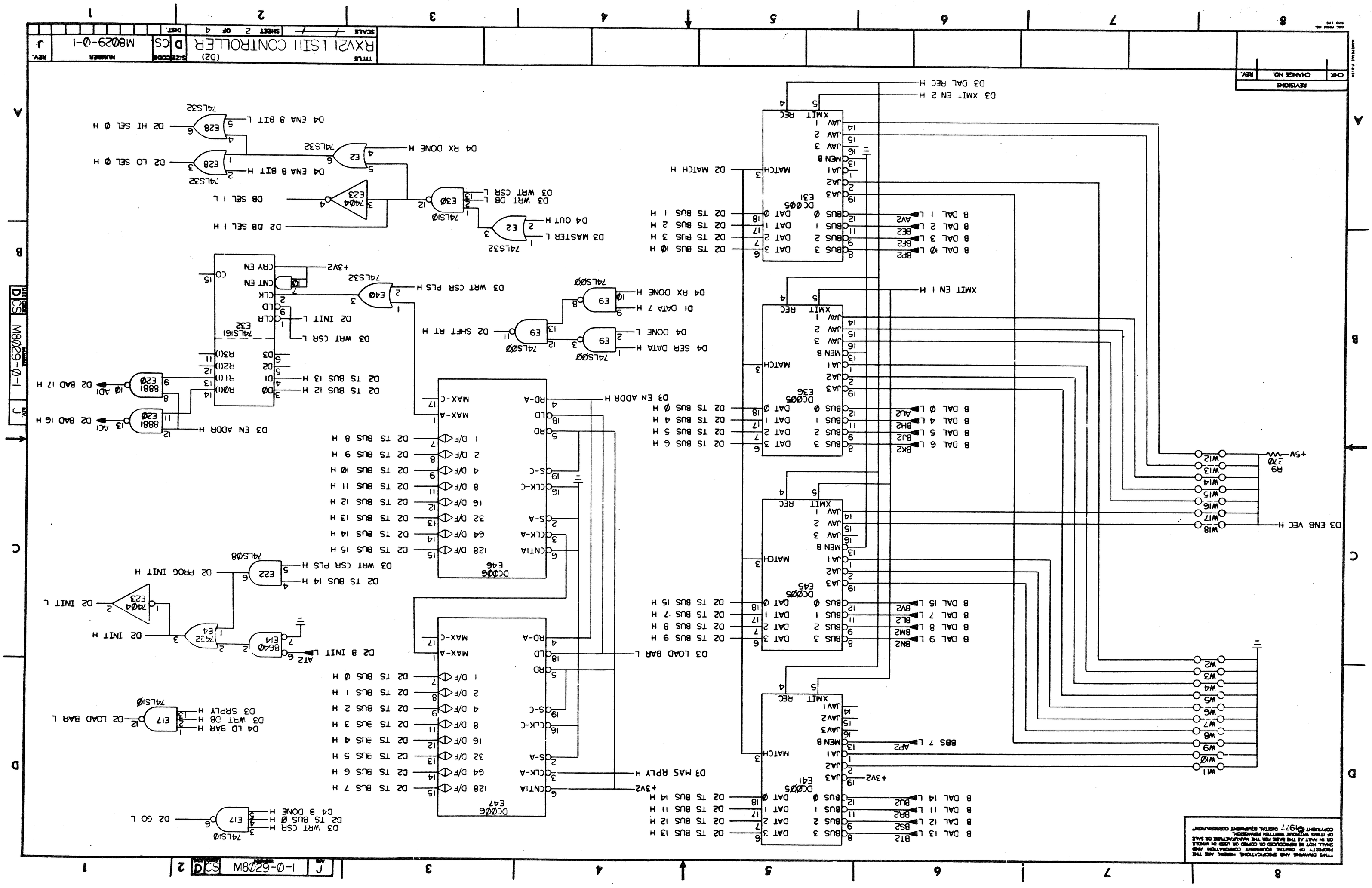
RXV21 LSI11 CONTROLLER
(D2)
M8029-0-1
REVISIONS
DC005
DC006
74LS00
74LS02
74LS04
74LS08
74LS10
74LS32
74LS161
74LS240
74LS241
74LS244
74LS245
74LS374
74LS640
+5V
+3V2
R9
270
D3 ENB VEC H
D3 XMIT EN 2 H
D3 DAL REC H
XMIT EN 1 H
D3 ENA ADDR H
D3 LOAD BAR L
D3 MAS RPLY H
D3 WRT CSR PLS H
D3 WRT CSR L
D2 INIT L
D2 INIT H
D2 B INIT L
D2 PROG INIT H
D2 TS BUS 14 H
D2 GO L
D2 LOAD BAR L
D2 BAD 17 H
D2 BAD 16 H
D2 TS BUS 12 H
D2 TS BUS 13 H
D2 TS BUS 15 H
D2 TS BUS 8 H
D2 TS BUS 9 H
D2 TS BUS 10 H
D2 TS BUS 11 H
D2 TS BUS 12 H
D2 TS BUS 13 H
D2 TS BUS 14 H
D2 TS BUS 15 H
D2 TS BUS 0 H
D2 TS BUS 1 H
D2 TS BUS 2 H
D2 TS BUS 3 H
D2 TS BUS 4 H
D2 TS BUS 5 H
D2 TS BUS 6 H
D2 TS BUS 7 H
D2 TS BUS 9 H
D2 TS BUS 8 H
D2 TS BUS 7 H
D2 TS BUS 15 H
D2 TS BUS 14 H
D2 TS BUS 11 H
D2 TS BUS 12 H
D2 TS BUS 13 H
D2 TS BUS 10 H
D2 TS BUS 1 H
D2 TS BUS 2 H
D2 TS BUS 3 H
D2 TS BUS 4 H
D2 TS BUS 5 H
D2 TS BUS 6 H
D2 TS BUS 7 H
D2 TS BUS 0 H
D2 MATCH H
D2 DB SEL 1 H
D2 LO SEL 0 H
D2 HI SEL 0 H
D2 SHFT RT H
D2 DONE L
D2 RX DONE H
D2 ENA 8 BIT H
D2 ENA 9 BIT L
D2 OUT H
D2 MASTER L
D2 SER DATA H
D2 DATA 7

"THIS DRAWING AND SPECIFICATIONS, HEREIN, ARE THE PROPERTY OF DIGITAL EQUIPMENT CORPORATION AND SHALL NOT BE REPRODUCED OR COPIED OR USED IN WHOLE OR IN PART AS THE BASIS FOR THE MANUFACTURE OR SALE OF ITEMS WITHOUT WRITTEN PERMISSION. COPYRIGHT © 1977 DIGITAL EQUIPMENT CORPORATION"

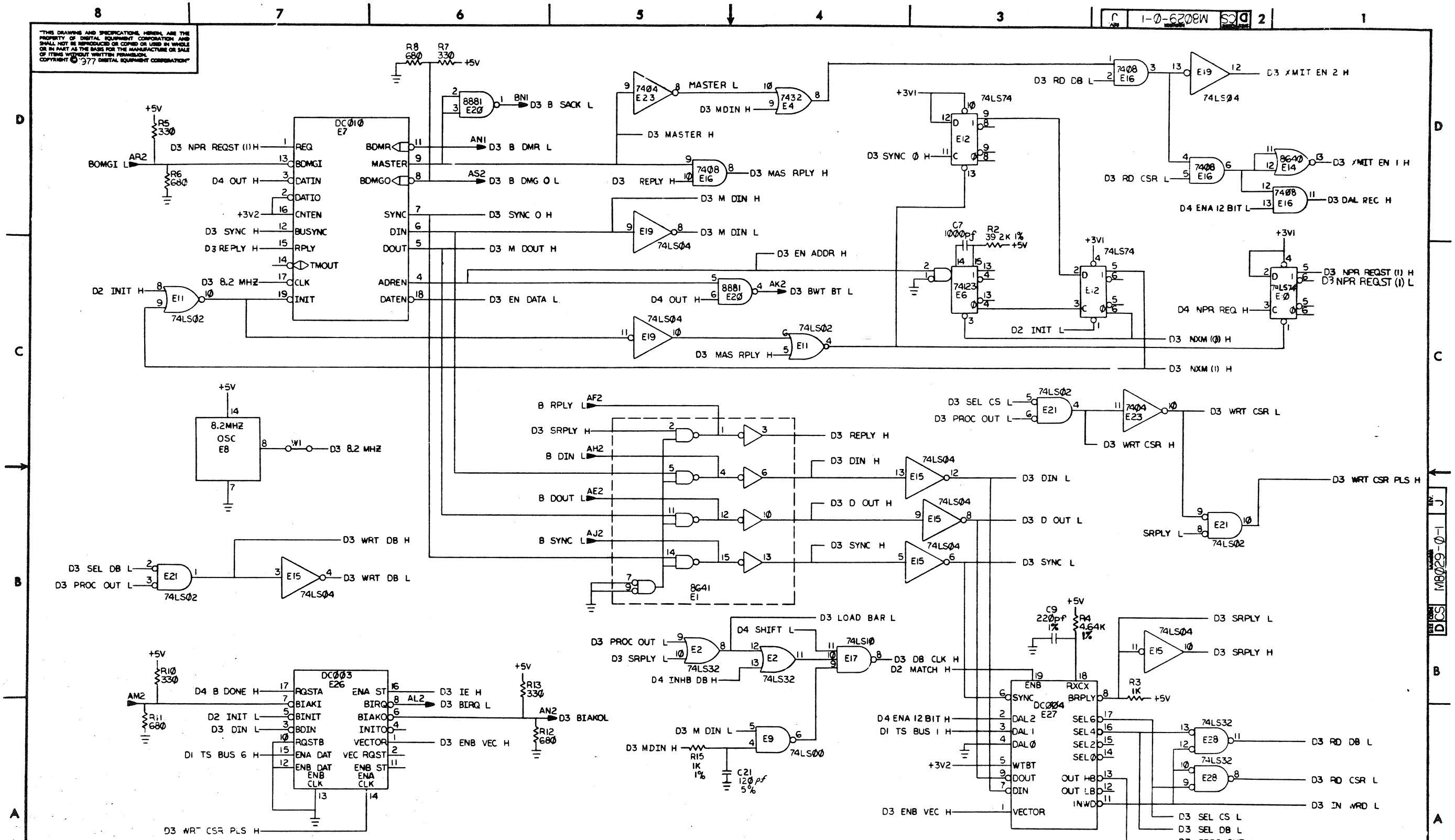

REVISIONS		
CHK	CHANGE NO.	REV.

TITLE (D3) RXV21 LSI11 CONTROLLER

SIZE D CODE CS NUMBER M8029-0-1 REV. J

SCALE — SHEET 3 OF 4 DIST.

"THIS DRAWING AND SPECIFICATIONS, HEREIN, ARE THE PROPERTY OF DIGITAL EQUIPMENT CORPORATION AND SHALL NOT BE REPRODUCED OR COPIED OR USED IN WHOLE OR IN PART AS THE BASIS FOR THE MANUFACTURE OR SALE OF ITEMS WITHOUT WRITTEN PERMISSION. COPYRIGHT © 1977 DIGITAL EQUIPMENT CORPORATION"

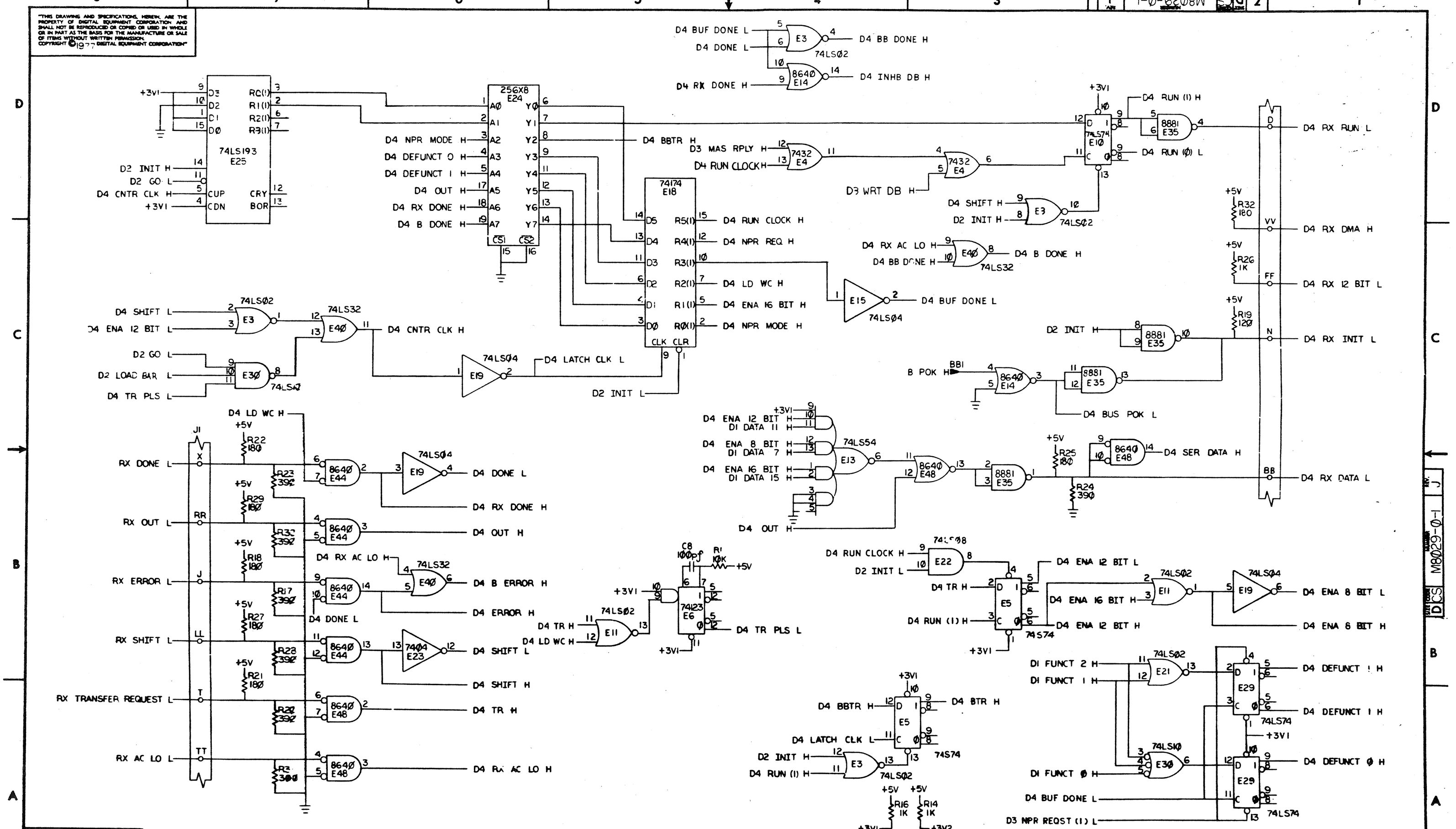

REVISIONS		
CHK	CHANGE NO.	REV.

TITLE	SIZE	CODE	NUMBER	REV.
RXV21 LSI11 CONTROLLER (D4)	D	CS	M8029-0-1	J
SCALE — / —	SHEET 4 OF 4	DIST.		

DIGITAL EQUIPMENT CORPORATION
MAYNARD, MASSACHUSETTS

PARTS LIST

MADE BY ROBERT MORIN DATE 5 SEPT '78	CHECKED RPMorin DATE 8 SEPT 78	SECTION
ENG RPMorin DATE 8 SEPT 78	PROD M. Dunlavey DATE 9-8-78	ISSUED SECT.

ITEM NO.	DWG NO./PART NO.	DESCRIPTION	QUANTITY/VARIATION RXV21-Ø-3
1	MP00628	RXV21 PRINT SET	1
2	MP00629	RX02 PRINT SET	1
3	EK-RX02-UG	RX02 USER'S GUIDE	1
4	ZJ279-RB	LIB KIT	1

TITLE	ASSY NO.	SIZE	CODE	NUMBER	REV.	ECO NO.
RXV21, SOFTWARE LIST	B-DD-RXV21-Ø	A	PL	RXV21-Ø-3	RXV21-M1Ø01	A
	SHEET 1 OF 1	DIST.				

DEC FORM DEC 16-(325)-1031-N870
DRA 110

DIGITAL EQUIPMENT CORPORATION
MAYNARD, MASSACHUSETTS

PARTS LIST

MADE BY	ROBERT MORIN	CHECKED	R.P. Morin	SECTION	
DATE	5 SEP 78	DATE	8 SEP 78		
ENG	R.P.MORAN	PROD	M. DURHAM	ISSUED SECT.	
DATE	8 SEP 78	DATE	8 SEP 78		

ITEM NO.	DWG NO./PART NO.	DESCRIPTION	RXV21-0	RXV21-AA	RXV21-AC	RXV21-AD	RXV21-BA	RXV21-BC	RXV21-BD	RXV21-DA	RXV21-DC	RXV21-DD	RXV21-EA	RXV21-EC
1	D-UA-M8029-0-0	RXV21 LSI-11 RX02 CONTROLLER	1	1	1	1	1	1	1	1	1	1	1	1
2	E-UA-RX02-0-0	RX02 FLOPPY DISK DRIVE ASSY.	-	1	1	1	1	1	1	1	1	1	-	-
3	C-AD-7012405-0-0	I/O CABLE ASSY. W/MTG. BRKT.	-	-	-	-	-	-	-	1	1	1	-	-
4	D-IA-7412853-0-0	DUAL DRIVE FRONT PLATE	-	-	-	-	-	-	-	1	1	1	-	-
5	A-PL-RXV21-0-3	SOFTWARE SHIP LIST	1	1	1	1	1	1	1	1	1	1	1	1
6	ZJ279-RB	LIB KIT	1	1	1	1	1	1	1	1	1	1	1	1
7	E-UA-RX02M-0-0	(UNIT ASSEMBLY RX02M	-	-	-	-	-	-	-	-	-	-	1	1
8	A-PS-1700220-01	CABLE (10 FT.)	-	-	-	-	-	-	-	-	-	-	1	1

TITLE	ASSY NO.	SIZE	CODE	NUMBER	REV.	ECO NO.
SHIPPING LIST, RXV21	B-DD-RXV21-0	A	PL	RXV21-0-2	B	RXV21-ML002
	SHEET 1 OF 2	DIST.				

DEC FORM DEC 16-(325)-1031-N870
DRA 110

DIGITAL EQUIPMENT CORPORATION
MAYNARD, MASSACHUSETTS

PARTS LIST

MADE BY	ROBERT MORIN	CHECKED	R.P. MORIN	SECTION	
DATE	5 SEP 78	DATE	8 SEP 78		
ENG	R.P. MORIN	PROD	M. Durham	ISSUED SECT.	
DATE	8 SEP 78	DATE	8 SEP 78		

ITEM NO.	DWG NO./PART NO.	DESCRIPTION	RXV21-ED
1	D-UA-M8029-0-0	RXV21 LSI-11 RX02 CONTROLLER	1
2	E-UA-RX02-0-0	RX02 FLOPPY DISK DRIVE ASSY.	-
3	C-AD-7012405-0-0	I/O CABLE ASSY. W/MTG. BRKT.	-
4	D-IA-7412853-0-0	DUAL DRIVE FRONT PLATE	-
5	A-PL-RXV21-0-3	SOFTWARE SHIP LIST	1
6	ZJ279-RB	LIB KIT	1
7	E-UA-RX02M-0-0	UNIT ASSEMBLY RX02M	1
8	A-PS-1700220-01	CABLE (10 FT.)	1

TITLE	ASSY NO.	SIZE	CODE	NUMBER	REV	ECO NO.
SHIPPING LIST, RXV21	B-DD-RXV21-0	A	PL	RXV21-0-2	B	RXV21-ML002
	SHEET 2 OF 2	DIST				

DEC FORM
DRA 110